AMENDED SITE DEVELOPMENT PLAN
A COMPREHENSIVE PERMIT M.G.L. c. 40B
"THE RESIDENCES AT BURNS AVENUE"
WALPOLE, MASSACHUSETTS

DATE: APRIL 21, 2020
Revised: May 21, 2020
October 22, 2020
February 23, 2022
May 5, 2022

ASSESSOR'S REFERENCE:
MAP 20, PARCEL 119
MAP 20, PARCEL 136
MAP 20, PARCEL 137
MAP 20, PARCEL 115

PLAN REFERENCE:
PLAN No. 959 OF 1980, Bk. 5808, Pg. 530
PLAN No. 1520 OF 1987, BK. 362
PLAN No. 990 OF 1954, BK 3279, PG 340

ZONING CLASSIFICATION:
GENERAL RESIDENCE – GR
FRONTAGE: 100 FT.
SETBACKS:
FRONT: 30'
SIDE: 10'
REAR: 30'

OWNERS OF RECORD:
1. MAP 20, PARCEL 119
DEED REF: BK. 34158, PG. 536
WALL STREET DEV. CORP.
P.O. BOX 272
WESTWOOD, MA 02090
2. MAP 20, PARCEL 136
DEED REF: BK. 36797, PG. 372
WALL STREET DEV. CORP.
P.O. BOX 272
WESTWOOD, MA 02090
3. MAP 20, PARCEL 137
DEED REF: BK. 35653, PG. 276
BURNS AVENUE DEVELOPMENT LLC
2 WARTHIN CIRCLE
NORWOOD, MA 02062
4. MAP 20, PARCEL 115
DEED REF: BK. 25238, PG. 585
BRIAN MARTIN
7 BROOK LANE
WALPOLE, MA 02081

ZONING TABLE:

	REQUIRED	PROPOSED
LOT AREA:	15,000 S.F.	2,737 S.F.(Min)
LOT FRONTAGE:	100 FT.	38 FT. (Min)
YARD SETBACKS:		
FRONT:	30 FT.	10.0 FT.(Min)
SIDE:	10 FT.	5.0 FT. (Min)
REAR:	30 FT.	8.0 FT. (Min)
LOT COVERAGE STRUCTURES:	30 %	45 %
LOT COVERAGE IMPERVIOUS:	50 %	55 %
MAX BLDG HEIGHT:	35 FT.	35 FT.
MAX STORIES	2.5	2.5

PROPOSED: 20 LOTS

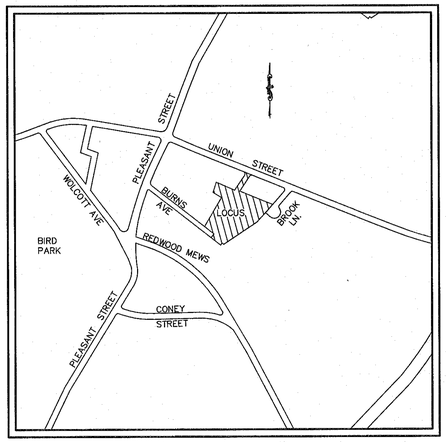

LOCUS MAP
1"=600'

COMMONWEALTH OF MASSACHUSETTS
JOYCE E. HASTINGS
No. 39393
REGISTERED PROFESSIONAL LAND SURVEYOR

JOYCE E. HASTINGS P.L.S. — 5/5/2022 DATE

COMMONWEALTH OF MASSACHUSETTS
ROBERT S. TRUAX
CIVIL
NO. 56567
REGISTERED PROFESSIONAL ENGINEER

ROBERT S. TRUAX, P.E. — 5/5/22 DATE

Prepared By:
GLM ENGINEERING CONSULTANTS, INC.
19 EXCHANGE STREET
HOLLISTON, MASSACHUSETTS 01746
(508)429-1100 fax:(508)429-7160

Applicant:
WALL STREET DEVELOPMENT CORP.
P.O. BOX 272
WESTWOOD, MASSACHUSETTS 02090

SHEET INDEX

1 COVER
2 EXISTING CONDTIONS
3 LOT LAYOUT
4 LAYOUT PLAN
5 GRADING, DRAINAGE & UTILITIES
6 PROFILES
7 EROSION CONTROL PLAN
8–13 DETAILS
SUP–A RIVERFRONT EXISTING CONDITIONS
SUP–B RIVERFRONT AREA DISTURBANCE
SUP–C RESTORATION AND PLANTING

JOB No.	15588
SCALE:	AS NOTED
DATE:	APRIL 21, 2020
SHEET No.	1 of 13

LEGEND:

--186--	EXISTING CONTOUR
163x2	EXISTING SPOT ELEVATION
WV	EXISTING WATER GATE
	EXISTING TREE LINE
A-1	EXISTING WETLAND FLAG
TP 1	EXISTING TEST PIT LOCATION
202	PROPOSED CONTOUR
109x2	PROPOSED SPOT ELEVATION
	PROPOSED HYDRANT
	PROPOSED DRAIN MANHOLE
	PROPOSED CATCH BASIN
	PROPOSED DOUBLE CATCHBASIN
S	PROPOSED SEWER LINE
S	PROPOSED SEWER MANHOLE
W	PROPOSED WATER LINE
	PROPOSED STREET TREE
CCB	PROPOSED CAPE COD BERM

BURNS AVE.

GAY AVE.

UNION STREET (NOT RECOVERED)

BROOK LANE

N/F LAWRENCE & CLAIRE COPELAND 175 UNION STREET

N/F ANN N. SCHIFONE 183 UNION STREET

N/F ELIZABETH & STEPHEN BARROWS 189 UNION STREET

N/F JOHN & JUDITH CONROY 38-40 BURNS AVE.

(NOTE: SEE PLAN APRIL 2,1953 FILED AS NO.908 OF 1953 BK. 3159, PG.139.)

N/F WILLIAM L USEVICH 201 UNION STREET

N/F LEROY & AGNES MACPHAIL 207 UNION STREET

N/F ROGER MANZANARES 215 UNION STREET

N/F CHRISTOPHER & CATHY CAMPBELL

N/F TOWN OF WALPOLE C.C.

N/F CHERYL HAYES-MONTVILLE 8 BROOK LANE

LOT 119
53,500 ± S.F.
OR
1.23 ± ACRES

LOT 136
34,403 ± S.F.

LOT 137
52,933 ± S.F.
OR
1.22 ± ACRES

LOT A & B
16,537 ± S.F.

LIMIT OF PUBLIC WAY

100' RIPARIAN

200' RIPARIAN LINE

100' BUFFER ZONE

100 YEAR FLOOD

25' WETLAND BUFFER

15' WIDE DRAINAGE EASEMENT

20' DRAINAGE EASEMENT

DRAINAGE EASEMENT

D.E.P. WETLAND RESTRICTION #78

200' OUTER RIPARIAN ZONE

100' INNER RIPARIAN ZONE

RIVERFRONT AREA
TRAPHOLE BROOK

GRAPHIC SCALE

(IN FEET)
1 inch = 30 ft.

TOTAL PROJECT AREA:
157,373 ± S.F.
3.61 ± AC.
UPLAND AREA: 156,164 S.F.
WETLAND AREA: 1,209 S.F.

NOTE: IT SHALL BE THE RESPONSIBILITY OF THE CONTRACTOR TO VERIFY LOCATIONS AND ELEVATIONS OF EXISTING UTILITIES PRIOR TO COMMENCEMENT OF ANY CONSTRUCTION.
DIGSAFE IS TO BE NOTIFIED 72 WORKING HOURS IN ADVANCE OF CONSTRUCTION.
DIGSAFE 1-888-344-7233

DIG SAFE 1-888-344-7233

EXISTING CONDITIONS

REVISIONS

No.	DATE	DESCRIPTION
1	06/21/20	DRAINAGE SYSTEM
2	10/22/20	CONSERVATION COMMENTS
3	02/23/22	ZBA COMMENTS, REDUCE TO 38 UNITS
4	05/05/22	20 LOT RESIDENTIAL SUBDIVISION

COMMONWEALTH OF MASSACHUSETTS
JOYCE E. HASTINGS
No. 39393
REGISTERED PROFESSIONAL LAND SURVEYOR
5/5/2022

COMMONWEALTH OF MASSACHUSETTS
ROBERT S. TRUAX
CIVIL
NO. 56567
REGISTERED PROFESSIONAL ENGINEER
5/5/22

AMENDED SITE DEVELOPMENT PLAN
A COMPREHENSIVE PERMIT M.G.L. c. 40B
"THE RESIDENCES AT BURNS AVENUE"
WALPOLE, MASSACHUSETTS

APPLICANT:
WALL STREET DEVELOPMENT CORP.
P.O. BOX 272
WESTWOOD, MA 02090

GLM Engineering Consultants, Inc.
19 EXCHANGE STREET
HOLLISTON, MA 01746
P: 508-429-1100
F: 508-429-7160
www.GLMengineering.com

DRW.:	RST
JOB No.	15,588
DATE:	APRIL 21, 2020
SCALE:	1"= 30'
SHEET:	2 of 13
PLAN #:	27,096

ASSESSOR'S REFERENCE:
MAP 20, PARCEL 119
MAP 20, PARCEL 136
MAP 20, PARCEL 137

PLAN REFERENCE:
PLAN No. 959 OF 1980, Bk. 5808, Pg. 530
PLAN No. 1520 OF 1987, BK. 362
PLAN No. 990 OF 1954, BK 3279, PG [illegible]

ZONING CLASSIFICATION:
GENERAL RESIDENCE – GR
FRONTAGE: 100 FT.
SETBACKS:
FRONT: 30'
SIDE: 10'
REAR: 30'

LEGEND:

--186--	EXISTING CONTOUR
163x2	EXISTING SPOT ELEVATION
W	EXISTING WATER GATE
	EXISTING TREE LINE
O A-1	EXISTING WETLAND FLAG
TP 1	EXISTING TEST PIT LOCATION
202	PROPOSED CONTOUR
109x2	PROPOSED SPOT ELEVATION
	PROPOSED HYDRANT
D	PROPOSED DRAIN MANHOLE
	PROPOSED CATCH BASIN
	PROPOSED DOUBLE CATCHBASIN
S	PROPOSED SEWER LINE
S	PROPOSED SEWER MANHOLE
W	PROPOSED WATER LINE
	PROPOSED STREET TREE
CCB	PROPOSED CAPE COD BERM

GRAPHIC SCALE
(IN FEET)
1 inch = 30 ft.

NOTE: IT SHALL BE THE RESPONSIBILITY OF THE CONTRACTOR TO VERIFY LOCATIONS AND ELEVATIONS OF EXISTING UTILITIES PRIOR TO COMMENCEMENT OF ANY CONSTRUCTION.
DIGSAFE IS TO BE NOTIFIED 72 WORKING HOURS IN ADVANCE OF CONSTRUCTION.
DIGSAFE 1-888-344-7233

DIG SAFE 1-888-344-7233

LAYOUT

REVISIONS

No.	DATE	DESCRIPTION
1	05/21/20	DRAINAGE SYSTEM
2	10/22/20	CONSERVATION COMMENTS
3	02/23/22	ZBA COMMENTS, REDUCE TO 38 UNITS
4	05/05/22	20 LOT RESIDENTIAL SUBDIVISION

COMMONWEALTH OF MASSACHUSETTS JOYCE E. HASTINGS No. 39393 REGISTERED PROFESSIONAL LAND SURVEYOR
5/5/2022

COMMONWEALTH OF MASSACHUSETTS ROBERT S. TRUAX CIVIL NO. 56567 REGISTERED PROFESSIONAL ENGINEER
5/5/22

AMENDED SITE DEVELOPMENT PLAN
A COMPREHENSIVE PERMIT M.G.L.c. 40B
"THE RESIDENCES AT BURNS AVENUE"
WALPOLE, MASSACHUSETTS

APPLICANT:
WALL STREET DEVELOPMENT CORP.
P.O. BOX 272
WESTWOOD, MA 02090

GLM Engineering Consultants, Inc.
19 EXCHANGE STREET
HOLLISTON, MA 01746
P: 508-429-1100
F: 508-429-7160
www.GLMengineering.com

DRW.: rst	
JOB No.	15,588
DATE:	APRIL 21, 2020
SCALE:	1"= 30'
SHEET:	3 of 13
PLAN #:	27,096

ASSESSOR'S REFERENCE:
MAP 20, PARCEL 119
MAP 20, PARCEL 136
MAP 20, PARCEL 137

PLAN REFERENCE:
PLAN No. 959 OF 1980, Bk. 5808, Pg. 530
PLAN No. 1520 OF 1987, BK. 362
PLAN No. 990 OF 1954, BK 3279, PG 340

ZONING CLASSIFICATION:
GENERAL RESIDENCE – GR
FRONTAGE: 100 FT.
SETBACKS:
FRONT: 30'
SIDE: 10'
REAR: 30'

LEGEND:

--186--	EXISTING CONTOUR
163x2	EXISTING SPOT ELEVATION
WV	EXISTING WATER GATE
	EXISTING TREE LINE
O A-1	EXISTING WETLAND FLAG
TP 1	EXISTING TEST PIT LOCATION
202	PROPOSED CONTOUR
109x2	PROPOSED SPOT ELEVATION
	PROPOSED HYDRANT
	PROPOSED DRAIN MANHOLE
	PROPOSED CATCH BASIN
	PROPOSED DOUBLE CATCHBASIN
—S—	PROPOSED SEWER LINE
	PROPOSED SEWER MANHOLE
—W—	PROPOSED WATER LINE
	PROPOSED STREET TREE
CCB	PROPOSED CAPE COD BERM

N/F LAWRENCE & CLAIRE COPELAND 175 UNION STREET

N/F ANN N. SCHIFONE 183 UNION STREET

N/F ELIZABETH & STEPHEN BARROWS 189 UNION STREET

N/F JOHN & JUDITH CONROY 38-40 BURNS AVE.

(NOTE: SEE PLAN APRIL 2,1953 FILED AS NO.400 OF 1953 BK. 3159, PG.139.)

N/F WILLIAM L USEVICH 201 UNION STREET

N/F LEROY & AGNES MACPHAIL 207 UNION STREET

N/F ROGER MANZANARES 215 UNION STREET

N/F CHRISTOPHER & CATHY CAMPBELL

N/F TOWN OF WALPOLE C.C.

D.E.P. WETLAND RESTRICTION #78

N/F CHERYL HAYES-MONTVILLE 8 BROOK LANE

UNION STREET (NOT RECOVERED)

BURNS AVE.

GAY AVE.

BROOK LANE

LIMIT OF PUBLIC WAY

TOTAL PROJECT AREA:
157,373 ± S.F.
3.61 ± AC.
UPLAND AREA: 156,164 S.F.
WETLAND AREA: 1,209 S.F.

GRAPHIC SCALE
(IN FEET)
1 inch = 30 ft.

NOTE: IT SHALL BE THE RESPONSIBILITY OF THE CONTRACTOR TO VERIFY LOCATIONS AND ELEVATIONS OF EXISTING UTILITIES PRIOR TO COMMENCEMENT OF ANY CONSTRUCTION.
DIGSAFE IS TO BE NOTIFIED 72 WORKING HOURS IN ADVANCE OF CONSTRUCTION.
DIGSAFE 1-888-344-7233

DIG SAFE 1-888-344-7233

LAYOUT

REVISIONS		
No.	DATE	DESCRIPTION
1	05/21/20	DRAINAGE SYSTEM
2	10/22/20	CONSERVATION COMMENTS
3	02/23/22	ZBA COMMENTS, REDUCE TO 38 UNITS
4	05/05/22	20 LOT RESIDENTIAL SUBDIVISION

COMMONWEALTH OF MASSACHUSETTS JOYCE E. HASTINGS No. 39393 REGISTERED PROFESSIONAL LAND SURVEYOR
5/5/2022

COMMONWEALTH OF MASSACHUSETTS ROBERT S. TRUAX CIVIL No. 56561 REGISTERED PROFESSIONAL ENGINEER
5/5/22

AMENDED SITE DEVELOPMENT PLAN
A COMPREHENSIVE PERMIT M.G.L.c. 40B
"THE RESIDENCES AT BURNS AVENUE"
WALPOLE, MASSACHUSETTS

APPLICANT:
WALL STREET DEVELOPMENT CORP.
P.O. BOX 272
WESTWOOD, MA 02090

GLM Engineering Consultants, Inc.
19 EXCHANGE STREET
HOLLISTON, MA 01746
P: 508-429-1100
F: 508-429-7160
www.GLMengineering.com

DRW.:	rst
JOB No.	15,588
DATE:	APRIL 21, 2020
SCALE:	1"= 30'
SHEET:	4 of 13
PLAN #:	27,096

DEEP OBSERVATION HOLE LOGS

DEEP HOLE – 15–1		
HORIZ DEPTH	DATE: 6/08/16 SOIL DESCRIPTION	ELEV.
0" 4"	A SANDY LOAM 10YR3/2	108.0
34"	Bw SANDY LOAM 10YR5/6	105.1
74"	C SANDY LOAM 2.5Y5/4	101.8
	GROUNDWATER OBSERVED	
34"	SOIL MOTTLING	105.1
	GROUNDWATER MONITORED	
34"	ESTIMATED SEASONAL HIGH GROUNDWATER	105.1

DEEP HOLE – 15–2		
HORIZ DEPTH	DATE: 6/08/16 SOIL DESCRIPTION	ELEV.
0" 72"	FILL	111.0 / 105.0
118"	C SANDY LOAM 2.5Y5/4	101.1
96"	GROUNDWATER OBSERVED	103.0
72"	SOIL MOTTLING	105.0
	GROUNDWATER MONITORED	
72"	ESTIMATED SEASONAL HIGH GROUNDWATER	105.0

DEEP HOLE – 15–3		
HORIZ DEPTH	DATE: 6/08/16 SOIL DESCRIPTION	ELEV.
0" 84"	FILL	110.3 / 103.3
108"	C SANDY LOAM 2.5Y5/4	101.3
72"	GROUNDWATER OBSERVED	104.3
	SOIL MOTTLING	
	GROUNDWATER MONITORED	
	ESTIMATED SEASONAL HIGH GROUNDWATER	

DEEP HOLE – 15–4		
HORIZ DEPTH	DATE: 6/08/16 SOIL DESCRIPTION	ELEV.
0" 52"	FILL	112.0 / 107.5
78"	C SANDY LOAM 2.5Y5/4	105.5
	GROUNDWATER OBSERVED	
52"	SOIL MOTTLING	107.5
	GROUNDWATER MONITORED	
	ESTIMATED SEASONAL HIGH GROUNDWATER	

DEEP HOLE – 15–5		
HORIZ DEPTH	DATE: 6/08/16 SOIL DESCRIPTION	ELEV.
0" 52"	FILL	110.8 / 106.5
78"	C SANDY LOAM 2.5Y5/4	104.3
	GROUNDWATER OBSERVED	
52"	SOIL MOTTLING	106.5
	GROUNDWATER MONITORED	
	ESTIMATED SEASONAL HIGH GROUNDWATER	

DEEP HOLE – 15–6		
HORIZ DEPTH	DATE: 6/08/16 SOIL DESCRIPTION	ELEV.
0" 72"	FILL	112.7 / 106.7
96"	C SANDY LOAM 2.5Y5/4	104.0
	GROUNDWATER OBSERVED	
52"	SOIL MOTTLING	106.7
	GROUNDWATER MONITORED	
	ESTIMATED SEASONAL HIGH GROUNDWATER	

NOTE: IT SHALL BE THE RESPONSIBILITY OF THE CONTRACTOR TO VERIFY LOCATIONS AND ELEVATIONS OF EXISTING UTILITIES PRIOR TO COMMENCEMENT OF ANY CONSTRUCTION.
DIGSAFE IS TO BE NOTIFIED 72 WORKING HOURS IN ADVANCE OF CONSTRUCTION.
DIGSAFE 1–888–344–7233

DIG SAFE 1-888-344-7233

GRADING, DRAINAGE & UTILITIES

REVISIONS		
No.	DATE	DESCRIPTION
1	05/21/20	DRAINAGE SYSTEM
2	10/22/20	CONSERVATION COMMENTS
3	02/23/22	ZBA COMMENTS, REDUCE TO 38 UNITS
4	05/05/22	20 LOT RESIDENTIAL SUBDIVISION

COMMONWEALTH OF MASSACHUSETTS JOYCE E. HASTINGS No. 39393 REGISTERED PROFESSIONAL LAND SURVEYOR
5/5/2022

COMMONWEALTH OF MASSACHUSETTS ROBERT S. TRUAX CIVIL NO. 56567 REGISTERED PROFESSIONAL ENGINEER
5/5/22

AMENDED SITE DEVELOPMENT PLAN
A COMPREHENSIVE PERMIT M.G.L. c. 40B
"THE RESIDENCES AT BURNS AVENUE"
WALPOLE, MASSACHUSETTS

APPLICANT:
WALL STREET DEVELOPMENT CORP.
P.O. BOX 272
WESTWOOD, MA 02090

GLM Engineering Consultants, Inc.
19 EXCHANGE STREET
HOLLISTON, MA 01746
P: 508–429–1100
F: 508–429–7160
www.GLMengineering.com

DRW.:	rst
JOB No.	15,588
DATE:	APRIL 21, 2020
SCALE:	1"= 30'
SHEET:	5 of 13
PLAN #:	27,096

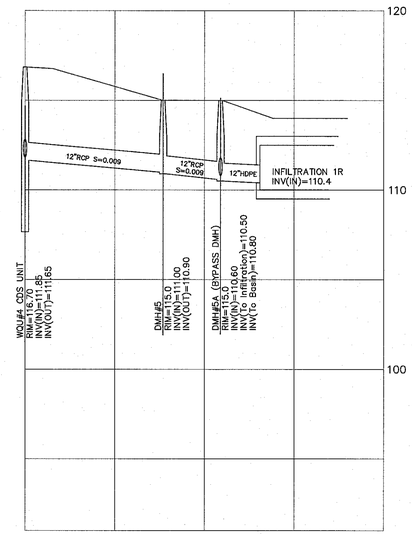

PROFILE DRAIN LINE DMH#4 TO HEADWALL#6

SCALE: Horiz: 1"=40'; Vert: 1"=4'

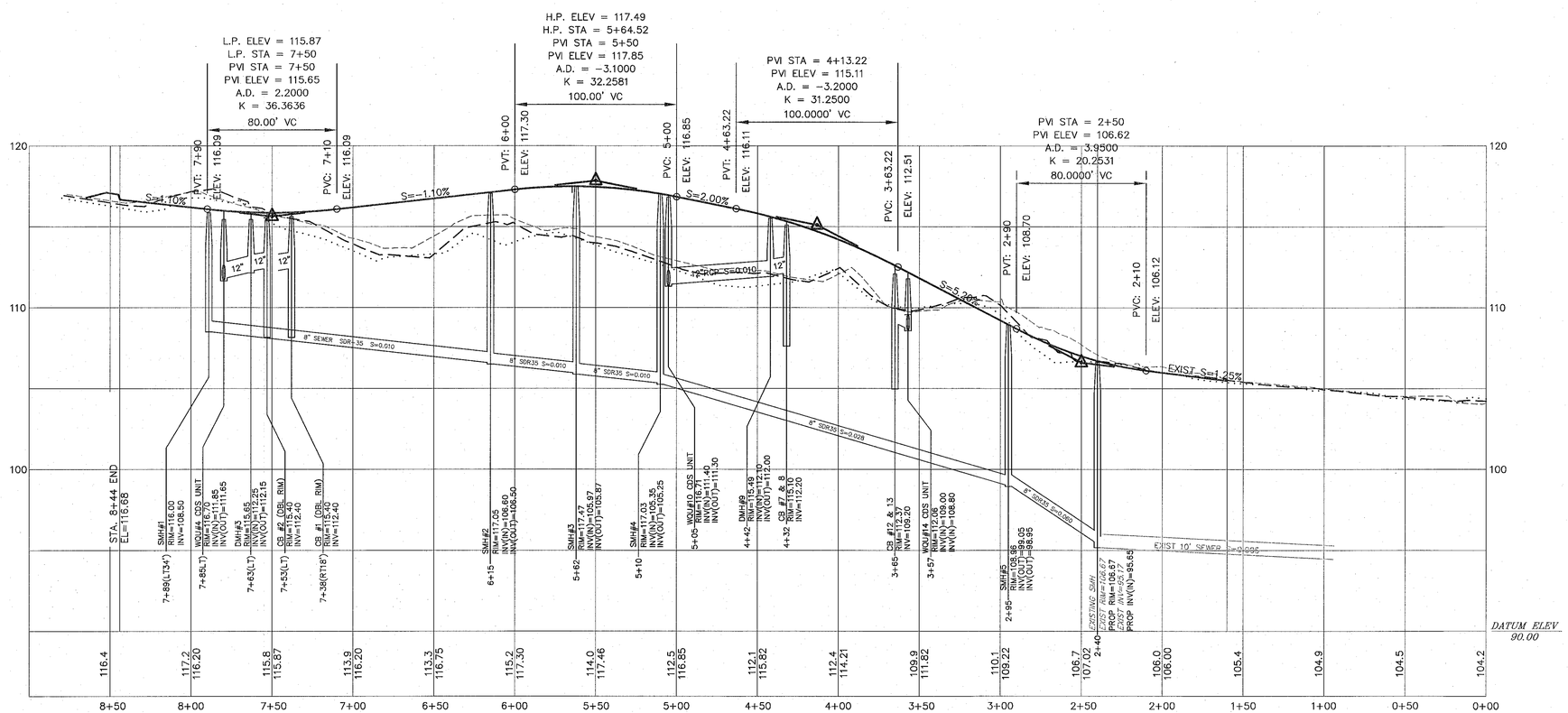

PROFILE DRIVE 'A'

SCALE: Horiz: 1"=40'; Vert: 1"=4'

GRAPHIC SCALE

30 0 15 30 60 120

(IN FEET)
1 inch = 30 ft.

PROFILE PLAN

REVISIONS

No.	DATE	DESCRIPTION
1	05/21/20	DRAINAGE SYSTEM
2	10/22/20	CONSERVATION COMMENTS
3	02/23/22	ZBA COMMENTS, REDUCE TO 38 UNITS
4	05/05/22	20 LOT RESIDENTIAL SUBDIVISION

COMMONWEALTH OF MASSACHUSETTS
JOYCE E. HASTINGS
No. 39393
REGISTERED PROFESSIONAL LAND SURVEYOR
5/5/2022

COMMONWEALTH OF MASSACHUSETTS
ROBERT S. TRUAX
CIVIL
NO. 56567
REGISTERED PROFESSIONAL ENGINEER
5/5/22

AMENDED SITE DEVELOPMENT PLAN
A COMPREHENSIVE PERMIT M.G.L.c. 40B
"THE RESIDENCES AT BURNS AVENUE"
WALPOLE, MASSACHUSETTS

APPLICANT:
WALL STREET DEVELOPMENT CORP.
P.O. BOX 272
WESTWOOD, MA 02090

GLM Engineering Consultants, Inc.
19 EXCHANGE STREET
HOLLISTON, MA 01746
P: 508-429-1100
F: 508-429-7160
www.GLMengineering.com

DRW.:	rst
JOB No.	15,588
DATE:	APRIL 21, 2020
SCALE:	1"= 30'
SHEET:	6 of 13
PLAN #:	27,096

EROSION CONTROL MAINTENANCE:

THE CONTRACTOR SHALL HAVE ON THE SITE, AN ADEQUATE QUANITY OF SUPPLEMENTAL HAYBALES, SILT FENCE AND STAKES TO BE USED FOR CONTROL OF EMERGENCY EROSION PROBLEMS. ALL EROSION CONTROL MEASURES SHALL BE INSPECTED WEEKLY AND AFTER A STORM EVENT OF 1" INCH OR GREATER.

DEWATERING:

PUMPING AND DEWATERING SHALL BE DONE IN A MANNER WHICH WILL NOT DISCHARGE ANY SILT AND SEDIMENT INTO A RESOURCE AREA. DISCHARGES FROM A DEWATERING CONSTRUCTION PROCEDURE WILL BE FILTERED THROUGH A SILTATION BASIN CONSTRUCTED UPLAND FROM THE WORK SITE. THE SILTATION BASIN SHALL BE A DEPRESSION SURROUNDED BY A HAYBALE DIKE OR SILT FENCE. OVERFLOW FROM THE BASIN SHALL BE PLANNED TO BE LOCATED OVER THICKLY AND NATURALLY MULCHED UPLAND AREA. ALL BASINS SHALL BE LOCATED AT LEAST 100 FEET UPSLOPE FROM ANY WETLAND RESOURCE AREA.

STOCKPILING:

STOCKPILE MATERIAL SHALL STORED IN THE AREAS DESIGNATED. ALL STOCKPILES AREAS SHALL BE SECURED AROUND THE PERIMETER WITH HAYBALE DIKE OR SILTFENCE.

EROSION CONTROL NOTES

THE FOLLOWING EROSION CONTROL SPECIFICATIONS ARE IN EFFECT WHEN SITE ALTERATION WORK IS CONTEMPLATED TO PREVENT DOWN GRADIENT OR ADJACENT AREAS FROM BEING ADVERSELY IMPACTED.

1. PRIOR TO ANY DISTURBANCE OR ALTERATIONS ON ANY AREA ON THE SITE. THE FILTER MITT SEDIMENT BARRIER SHALL BE INSTALLED IN THE LOCATIONS SHOWN ON THE SITE PLAN.

2. BARRIERS SHALL BE CONSTRUCTED AS SHOWN ON THE FILTER MITT WITH CONSTRUCTION FENCE DETAIL ABOVE.

3. ONCE INSTALLED, THE FILTER MITT SEDIMENT BARRIERS SHALL BE MAINTAINED IN PLACE UNTIL ALL AREAS UPGRADIENT FROM THE BARRIERS HAVE BEEN STABILIZED AS SPECIFIED HEREIN. UPON COMPLETION AND STABILIZATION OF THE PROJECT, THE FILTER MITT AND CONSTRUCTION FENCE SHALL BE REMOVED.

4. THE ORANGE CONSTRUCTION IS INTENDED TO ACT AS A LIMIT OF DISTURBANCE. ANY LAND DOWN GRADIENT FROM THE FENCE ACCIDENTALLY DISTURBED SHALL BE IMMEDIATELY REPAIRED AND RESTORED TO ORIGINAL CONDITION.

5. ALL DISTURBED AREAS NOT OTHERWISE DEVELOPED OR WHERE SPECIAL STABILIZATION MEASURES OR LANDSCAPE PLANTINGS ARE NOT PROPOSED SHALL BE LOAMED AND SEEDED. NO LESS THAN FOUR INCHES OF LOAM TOPSOIL SHALL BE SPREAD AND THE AREA SEEDED WITH CONSERVATION MIX.

6. ALL AREAS OUTSIDE THE LIMIT OF WORK ARE TO BE LEFT UNDISTURBED. DURING SITE WORK ALL PERSONS AND EQUIPMENT SHALL STAY OUTSIDE THESE AREAS TO PRESERVE THE EXISTING VEGETATION.

7. ALL SLOPES CAUSED BY EXCAVATION OF EXISTING GROUND, OR FILL OVER EXISTING GROUND TO CREATE BERMS OF EARTH MATERIALS OR RESULTING FROM RECONTOURING LAND FOR PROPOSED HOUSE LOCATIONS SHALL BE NO GREATER THAN 3:1, HORIZONTAL TO VERTICAL. THE TOE OF SLOPES IN FILL AREAS OR TOP OF SLOPE IN EXCAVATED AREAS SHALL BE NO CLOSER THAN 5 FEET FROM ADJACENT LOT LINES.

8. THE FIRST ONE-HUNDRED (100) FEET OF THE PROPOSED DRIVEWAY ENTRANCE AT BURNS AVE SHALL BE COVERED WITH TWELVE (12) INCHES OF 1 – 3 INCH CRUSHED STONE TO STABILIZE THE AREA (SEE DETAIL).

A MORE DETAILED SEDIMENT AND EROSION CONTROL PLAN WILL BE DEVELOPED AS PART OF THE NPDES STORMWATER POLLUTION PREVENTION PLAN.

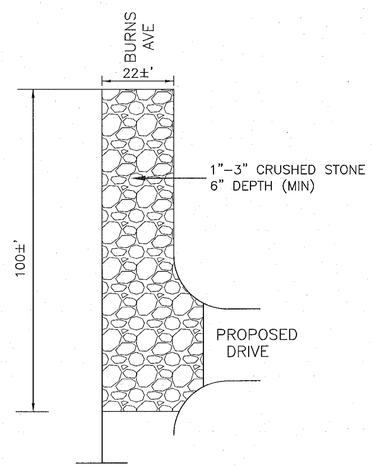

STABILIZED CONSTRUCTION ENTRANCE
NOT TO SCALE

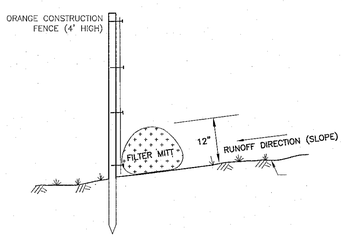

FILTER MITT WITH ORANGE CONSTRUCTION FENCE DETAIL
NOT TO SCALE

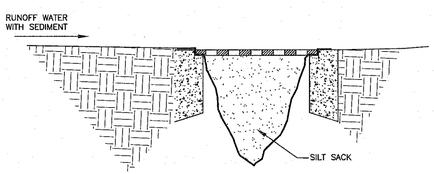

SILT SACK CATCH BASIN INLET
NOT TO SCALE

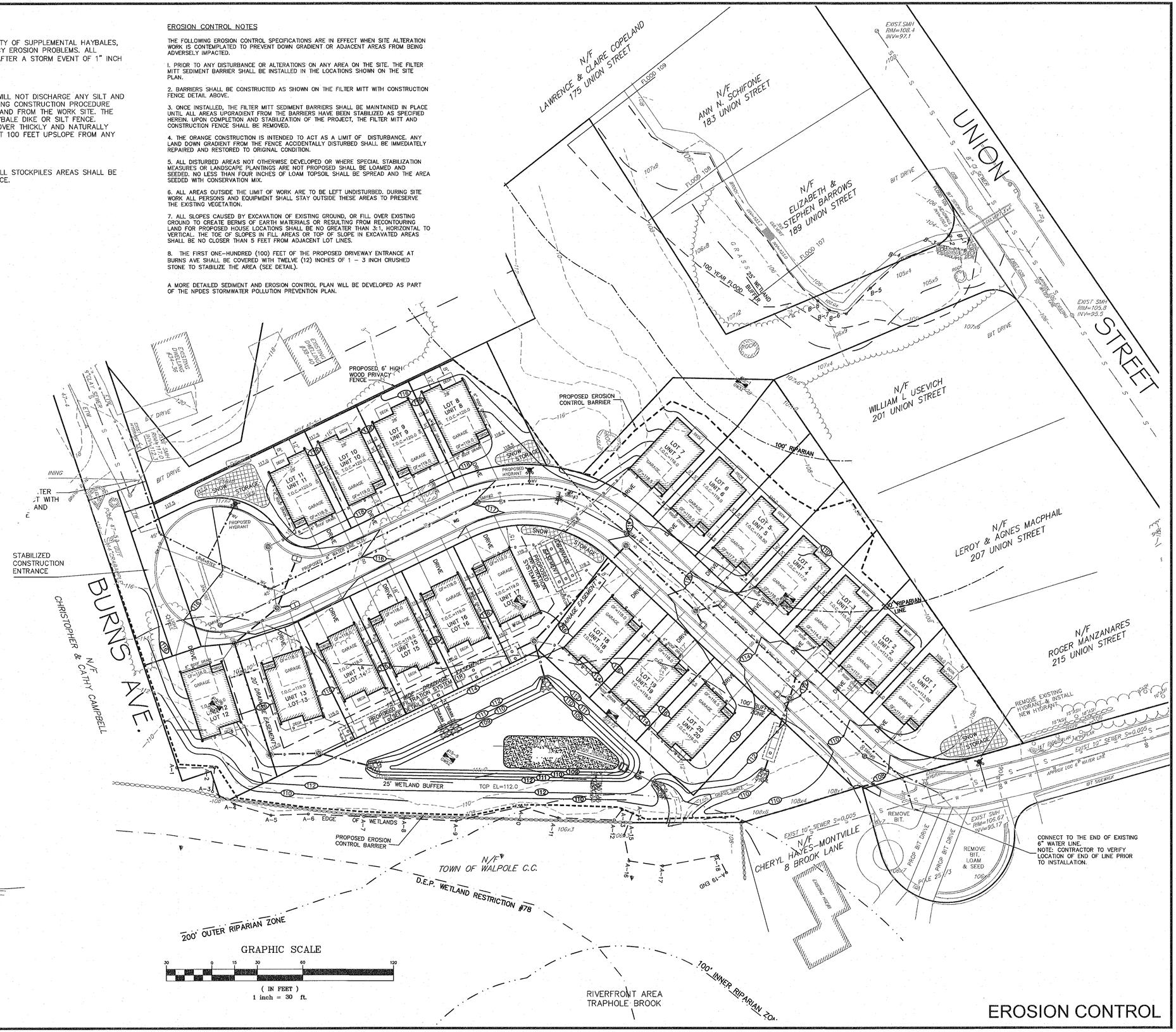

EROSION CONTROL

No.	DATE	DESCRIPTION
1	05/21/20	DRAINAGE SYSTEM
2	10/22/20	CONSERVATION COMMENTS
3	02/23/22	ZBA COMMENTS, REDUCE TO 38 UNITS
4	05/05/22	20 LOT RESIDENTIAL SUBDIVISION

REVISIONS

COMMONWEALTH OF MASSACHUSETTS
JOYCE E. HASTINGS
No. 39393
REGISTERED PROFESSIONAL LAND SURVEYOR
5/5/2022

COMMONWEALTH OF MASSACHUSETTS
ROBERT S. TRUAX
CIVIL
NO. 56567
REGISTERED PROFESSIONAL ENGINEER
5/5/22

AMENDED SITE DEVELOPMENT PLAN
A COMPREHENSIVE PERMIT M.G.L.c. 40B
"THE RESIDENCES AT BURNS AVENUE"
WALPOLE, MASSACHUSETTS

APPLICANT:
WALL STREET DEVELOPMENT CORP.
P.O. BOX 272
WESTWOOD, MA 02090

GLM Engineering Consultants, Inc.
19 EXCHANGE STREET
HOLLISTON, MA 01746
P: 508-429-1100
F: 508-429-7160
www.GLMengineering.com

DRW.:	rst
JOB No.	15,588
DATE:	APRIL 21, 2020
SCALE:	1"= 30'
SHEET:	7 of 13
PLAN #:	27,096

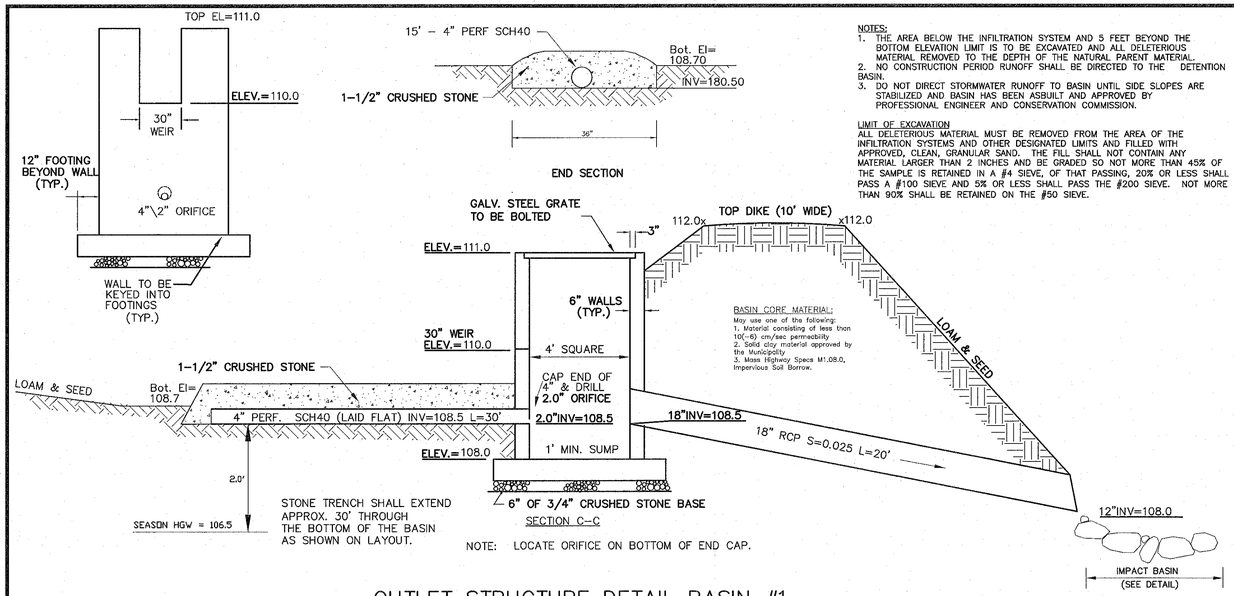

NOTES:
1. THE AREA BELOW THE INFILTRATION SYSTEM AND 5 FEET BEYOND THE BOTTOM ELEVATION LIMIT IS TO BE EXCAVATED AND ALL DELETERIOUS MATERIAL REMOVED TO THE DEPTH OF THE NATURAL PARENT MATERIAL.
2. NO CONSTRUCTION PERIOD RUNOFF SHALL BE DIRECTED TO THE DETENTION BASIN.
3. DO NOT DIRECT STORMWATER RUNOFF TO BASIN UNTIL SIDE SLOPES ARE STABILIZED AND BASIN HAS BEEN ASBUILT AND APPROVED BY PROFESSIONAL ENGINEER AND CONSERVATION COMMISSION.

LIMIT OF EXCAVATION
ALL DELETERIOUS MATERIAL MUST BE REMOVED FROM THE AREA OF THE INFILTRATION SYSTEMS AND OTHER DESIGNATED LIMITS AND FILLED WITH APPROVED, CLEAN, GRANULAR SAND. THE FILL SHALL NOT CONTAIN ANY MATERIAL LARGER THAN 2 INCHES AND BE GRADED SO NOT MORE THAN 45% OF THE SAMPLE IS RETAINED IN A #4 SIEVE, OF THAT PASSING, 20% OR LESS SHALL PASS A #100 SIEVE AND 5% OR LESS SHALL PASS THE #200 SIEVE. NOT MORE THAN 90% SHALL BE RETAINED ON THE #50 SIEVE.

OUTLET STRUCTURE DETAIL BASIN #1

(PRECAST CONCRETE STRUCTURE)
NOT TO SCALE

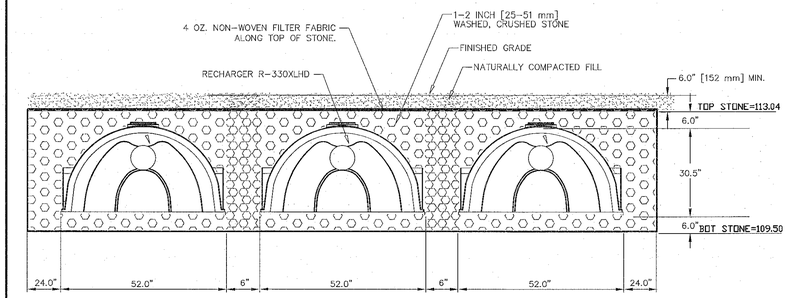

3-ROWS CULTEC R-330XLHD
12 CHAMBERS EACH ROW

THE AREA BELOW THE INFILTRATION SYSTEM AND 5 FEET BEYOND THE BOTTOM ELEVATION LIMIT IS TO BE EXCAVATED AND ALL DELETERIOUS MATERIAL REMOVED TO THE DEPTH OF THE NATURAL PARENT MATERIAL.

LIMIT OF EXCAVATION
ALL DELETERIOUS MATERIAL MUST BE REMOVED FROM THE AREA OF THE INFILTRATION SYSTEMS AND OTHER DESIGNATED LIMITS AND FILLED WITH APPROVED, CLEAN, GRANULAR SAND. THE FILL SHALL NOT CONTAIN ANY MATERIAL LARGER THAN 2 INCHES AND BE GRADED SO NOT MORE THAN 45% OF THE SAMPLE IS RETAINED IN A #4 SIEVE, OF THAT PASSING, 20% OR LESS SHALL PASS A #100 SIEVE AND 5% OR LESS SHALL PASS THE #200 SIEVE. NOT MORE THAN 90% SHALL BE RETAINED ON THE #50 SIEVE.

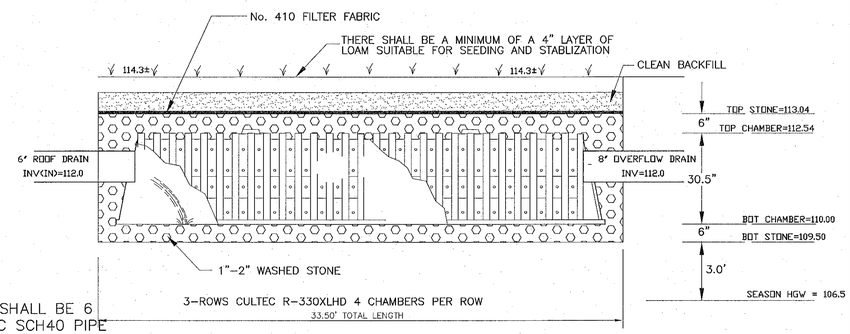

NOTE:
ALL ROOF DRAINS SHALL BE 6 INCH DIAMETER PVC SCH40 PIPE OR APPROVED EQUAL.

INFILTRATION CHAMBER SYSTEM#2R (CULTEC R-330XLHD)

NOT TO SCALE

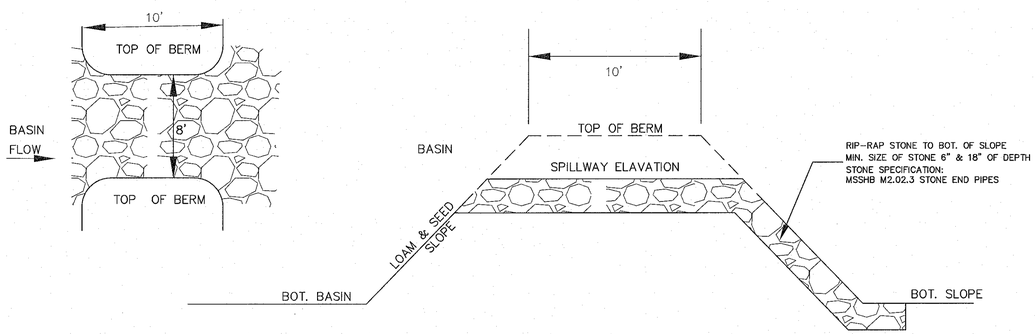

DETENTION BASIN EMERGENCY SPILLWAY DETAIL

NOT TO SCALE

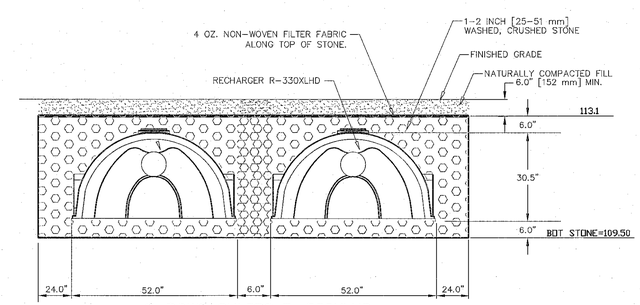

2-ROWS CULTEC R-330XLHD
18 CHAMBERS EACH ROW

THE AREA BELOW THE INFILTRATION SYSTEM AND 5 FEET BEYOND THE BOTTOM ELEVATION LIMIT IS TO BE EXCAVATED AND ALL DELETERIOUS MATERIAL REMOVED TO THE DEPTH OF THE NATURAL PARENT MATERIAL.

LIMIT OF EXCAVATION
ALL DELETERIOUS MATERIAL MUST BE REMOVED FROM THE AREA OF THE INFILTRATION SYSTEMS AND OTHER DESIGNATED LIMITS AND FILLED WITH APPROVED, CLEAN, GRANULAR SAND. THE FILL SHALL NOT CONTAIN ANY MATERIAL LARGER THAN 2 INCHES AND BE GRADED SO NOT MORE THAN 45% OF THE SAMPLE IS RETAINED IN A #4 SIEVE, OF THAT PASSING, 20% OR LESS SHALL PASS A #100 SIEVE AND 5% OR LESS SHALL PASS THE #200 SIEVE. NOT MORE THAN 90% SHALL BE RETAINED ON THE #50 SIEVE.

NOTE:
ALL ROOF DRAINS SHALL BE 6 INCH DIAMETER PVC SCH40 PIPE OR APPROVED EQUAL.

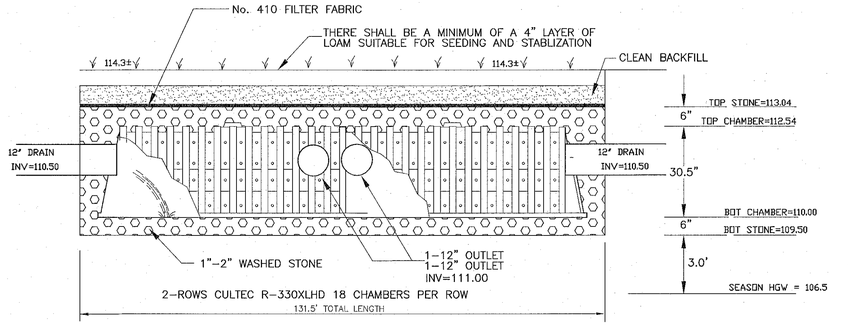

INFILTRATION CHAMBER SYSTEM#1R (CULTEC R-330XLHD)

NOT TO SCALE

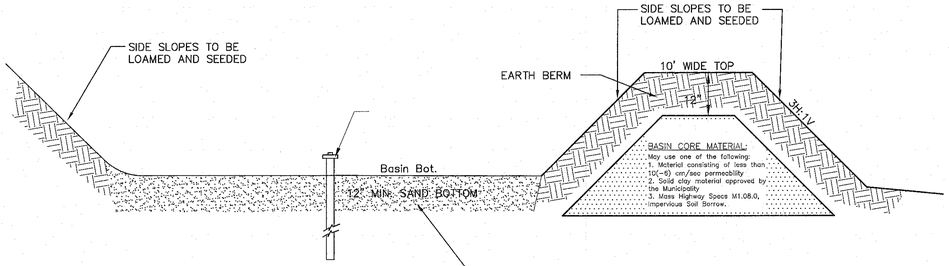

NOTES:
-SUBSOIL CONDITIONS SHALL BE OBSERVED PRIOR TO INSTALLATION OF THE INFILTRATION BASIN.
-CARE SHALL BE TAKEN TO PREVENT COMPACTION OF THE FINAL BASIN BOTTOM. USE DEEP TILLING TO BREAK UP COMPACTED SURFACES, SHOULD IT OCCUR.
-ENSURE ALL STUMPS ARE FULLY REMOVED FROM THE AREA OF THE INFILTRATION BASIN TO ENSURE PROPER FUNCTION.

BASIN BOTTOM EXCAVATION:
ALL TOPSOIL, SUBSOIL AND ANY DELETERIOUS MATERIAL MUST BE REMOVED FROM THE BOTTOM AREA OF THE DRAINAGE BASIN AND FILLED WITH APPROVED, CLEAN, GRANULAR SAND. THE FILL SHALL NOT CONTAIN ANY MATERIAL LARGER THAN 2 INCHES AND BE GRADED SO NOT MORE THAN 45% OF THE SAMPLE IS RETAINED IN A #4 SIEVE, OF THAT PASSING, 20% OR LESS SHALL PASS A #100 SIEVE AND 5% OR LESS SHALL PASS THE #200 SIEVE.

DETENTION BASIN TYPICAL SECTION

NOT TO SCALE

DETAILS

REVISIONS		
No.	DATE	DESCRIPTION
1	05/21/20	DRAINAGE SYSTEM
2	10/22/20	CONSERVATION COMMENTS
3	02/23/22	ZBA COMMENTS, REDUCE TO 38 UNITS
4	05/05/22	20 LOT RESIDENTIAL SUBDIVISION

COMMONWEALTH OF MASSACHUSETTS
JOYCE E. HASTINGS
No. 39393
REGISTERED PROFESSIONAL LAND SURVEYOR
5/5/2022

COMMONWEALTH OF MASSACHUSETTS
ROBERT S. TRUAX
CIVIL
NO. 50507
REGISTERED PROFESSIONAL ENGINEER
5/5/22

AMENDED SITE DEVELOPMENT PLAN
A COMPREHENSIVE PERMIT M.G.L.c. 40B
"THE RESIDENCES AT BURNS AVENUE"
WALPOLE, MASSACHUSETTS

APPLICANT:
WALL STREET DEVELOPMENT CORP.
P.O. BOX 272
WESTWOOD, MA 02090

GLM Engineering Consultants, Inc.
19 EXCHANGE STREET
HOLLISTON, MA 01746
P: 508-429-1100
F: 508-429-7160
www.GLMengineering.com

DRW.:	rst
JOB No.	15,588
DATE:	APRIL 21, 2020
SCALE:	1"= 30'
SHEET:	8 of 13
PLAN #:	27,096

NOTES

A) Gravel borrow subbase shall conform to section M1.03.0 type b, three inches largest dimension of the latest edition of the Massachusetts Highway Department Standard Specifications for Highways and Bridges (Standard Specifications).

B) Gravel borrow subbase shall be compacted to not less than 95 percent of maximum dry density of the material as determined by the Standard AASHTO Test Designation T99 compaction test method C at optimum moisture content as determined by the engineer.

C) "Tac Coat" as specified in Section 486.61 of the Standard Specifications shall be applied by "tac truck" between asphalt layers or as determined by the engineer.

D) Soils testing including sieve analysis, proctor testing and compaction testing shall be preformed once every 100 feet of paved roadway along the centerline of the roadway or as directed by the engineer.

E) Sidewalk ramps must meet current applicable ADA / AAB standards.

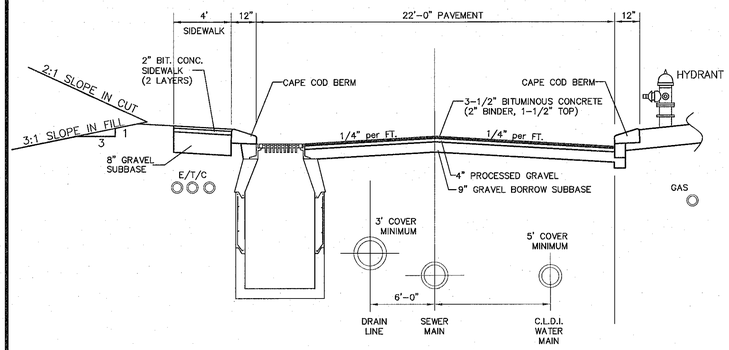

TYPICAL DRIVE CROSS SECTION

NOT TO SCALE

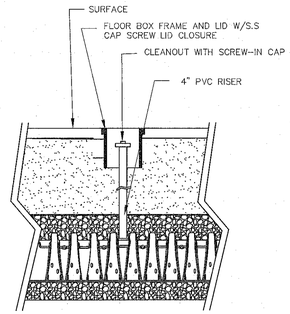

INSPECTION PORT DETAIL

NOT TO SCALE

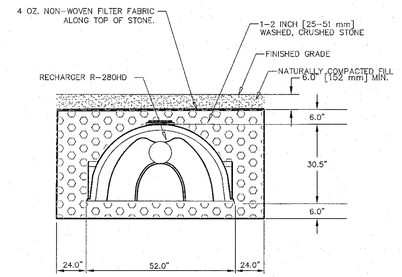

1-ROW CULTEC R-330xIHD 3 CHAMBERS

THE AREA BELOW THE INFILTRATION SYSTEM AND 5 FEET BEYOND THE BOTTOM ELEVATION LIMIT IS TO BE EXCAVATED AND ALL DELETERIOUS MATERIAL REMOVED TO THE DEPTH OF THE NATURAL PARENT MATERIAL.

LIMIT OF EXCAVATION
ALL DELETERIOUS MATERIAL MUST BE REMOVED FROM THE AREA OF THE INFILTRATION SYSTEMS AND OTHER DESIGNATED LIMITS AND FILLED WITH APPROVED, CLEAN, GRANULAR SAND. THE FILL SHALL NOT CONTAIN ANY MATERIAL LARGER THAN 2 INCHES AND BE GRADED SO NOT MORE THAN 45% OF THE SAMPLE IS RETAINED IN A #4 SIEVE, OF THAT PASSING, 20% OR LESS SHALL PASS A #100 SIEVE AND 5% OR LESS SHALL PASS THE #200 SIEVE. NOT MORE THAN 90% SHALL BE RETAINED ON THE #50 SIEVE.

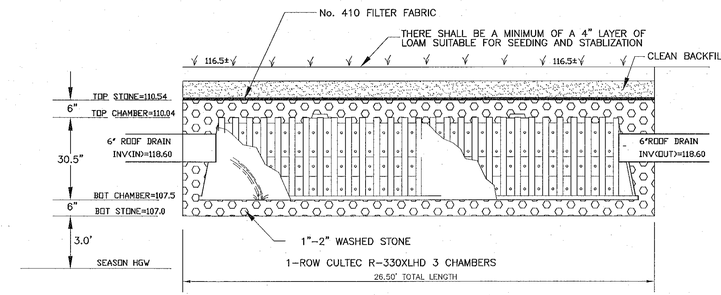

INFILTRATION CHAMBER SYSTEM#3R (CULTEC R-330XLHD)

NOT TO SCALE

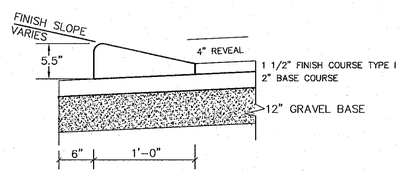

CAPE COD BERM DETAIL

NOT TO SCALE

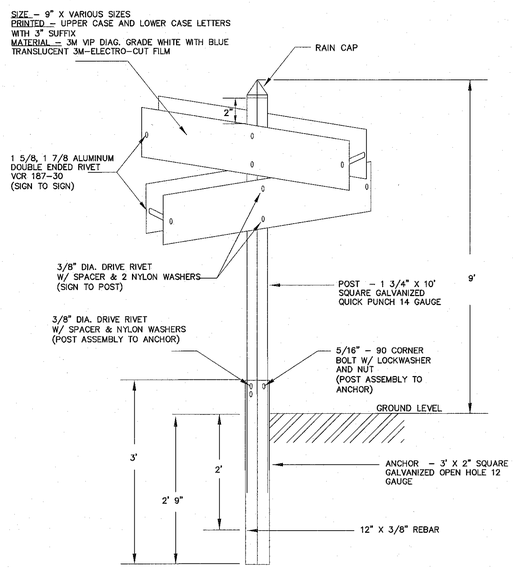

TYPICAL STREET SIGN DETAIL

(NOT TO SCALE)

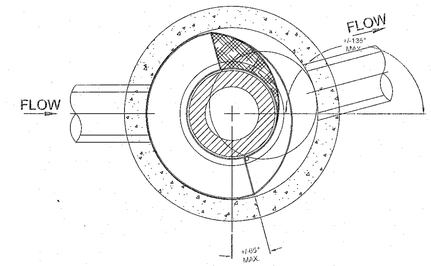

PLAN VIEW B-B

N.T.S.

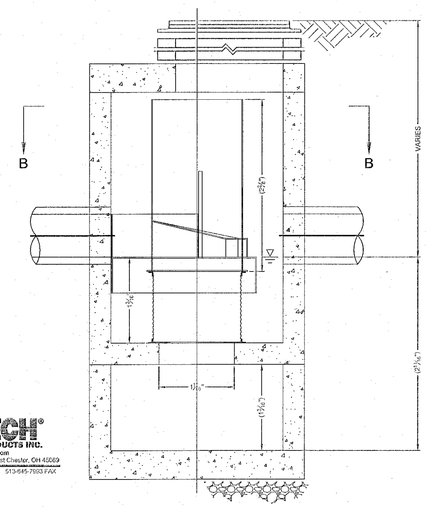

ELEVATION A-A

N.T.S.

CONTECH CONSTRUCTION PRODUCTS INC.
www.contech-cpi.com
10025 Centre Point Dr., Suite 400, West Chester, OH 45069
800-338-1122 513-645-7000 513-645-7993 FAX

GENERAL NOTES
1. CONTECH TO PROVIDE ALL MATERIALS UNLESS NOTED OTHERWISE.
2. DIMENSIONS MARKED WITH ( ) ARE REFERENCE DIMENSIONS. ACTUAL DIMENSIONS MAY VARY.
3. FOR FABRICATION DRAWINGS WITH DETAILED STRUCTURE DIMENSIONS AND WEIGHTS, PLEASE CONTACT YOUR CONTECH CONSTRUCTION PRODUCTS REPRESENTATIVE. www.contech-cpi.com
4. CDS WATER QUALITY STRUCTURE SHALL BE IN ACCORDANCE WITH ALL DESIGN DATA AND INFORMATION CONTAINED IN THIS DRAWING.
5. STRUCTURE SHALL MEET AASHTO HS20 AND CASTINGS SHALL MEET AASHTO M306 LOAD RATING, ASSUMING GROUNDWATER ELEVATION AT, OR BELOW, THE OUTLET PIPE INVERT ELEVATION. ENGINEER OF RECORD TO CONFIRM ACTUAL GROUNDWATER ELEVATION.
6. PVC HYDRAULIC SHEAR PLATE IS PLACED ON SHELF AT BOTTOM OF SCREEN CYLINDER. REMOVE AND REPLACE AS NECESSARY DURING MAINTENANCE CLEANING.

INSTALLATION NOTES
1. ANY SUB-BASE, BACKFILL DEPTH, AND/OR ANTI-FLOTATION PROVISIONS ARE SITE-SPECIFIC DESIGN CONSIDERATIONS AND SHALL BE SPECIFIED BY ENGINEER OF RECORD.
2. CONTRACTOR TO PROVIDE EQUIPMENT WITH SUFFICIENT LIFTING AND REACH CAPACITY TO LIFT AND SET THE CDS MANHOLE STRUCTURE (LIFTING CLUTCHES PROVIDED).
3. CONTRACTOR TO ADD JOINT SEALANT BETWEEN ALL STRUCTURE SECTIONS, AND ASSEMBLE STRUCTURE.
4. CONTRACTOR TO PROVIDE, INSTALL, AND GROUT PIPES. MATCH PIPE INVERTS WITH ELEVATIONS SHOWN.
5. CONTRACTOR TO TAKE APPROPRIATE MEASURES TO ASSURE UNIT IS WATER TIGHT, HOLDING WATER TO FLOWLINE INVERT MINIMUM. IT IS SUGGESTED THAT ALL JOINTS BELOW PIPE INVERTS ARE GROUTED.

WATER QUALITY UNIT DETAIL

~~CDS1515-3-C CDS INLINE STANDARD DETAIL~~

NOT TO SCALE

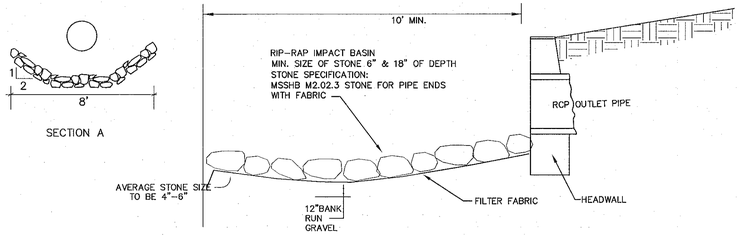

RIP-RAP DETAIL HEADWALLS

NOT TO SCALE

FRAME AND COVER
(DIAMETER VARIES)
N.T.S.

Note:

1) All details are subject to change without notice. Check with the Town of Walpole prior to using these details for the most up to date revisions.

TOWN OF WALPOLE, MASSACHUSETTS
DEPARTMENT OF PUBLIC WORKS
PLAN SHOWING TYPICAL ROADWAY DETAILS

1	7-11-96	DRAWN TO AUTOCAD FILE	MAJ
2	12-3-96	ADDED SLOPED GRANITE DETAILS	MAJ
3	11-20-08	MANY MISC. CHANGES	MAJ

REVISIONS

No.	DATE	DESCRIPTION
1	05/21/20	DRAINAGE SYSTEM
2	10/22/20	CONSERVATION COMMENTS
3	02/23/22	ZBA COMMENTS, REDUCE TO 38 UNITS
4	05/05/22	20 LOT RESIDENTIAL SUBDIVISION

COMMONWEALTH OF MASSACHUSETTS
ROBERT S. TRUAX
CIVIL
NO. 56567
REGISTERED PROFESSIONAL ENGINEER
5/5/22

AMENDED SITE DEVELOPMENT PLAN
A COMPREHENSIVE PERMIT M.G.L.c. 40B
"THE RESIDENCES AT BURNS AVENUE"
WALPOLE, MASSACHUSETTS

APPLICANT:
WALL STREET DEVELOPMENT CORP.
P.O. BOX 272
WESTWOOD, MA 02090

GLM Engineering Consultants, Inc.
19 EXCHANGE STREET
HOLLISTON, MA 01746
P: 508-429-1100
F: 508-429-7160
www.GLMengineering.com

DRW.:	rst
JOB No.	15,588
DATE:	APRIL 21, 2020
SCALE:	1"= 30'
SHEET:	9 of 13
PLAN #:	27,096

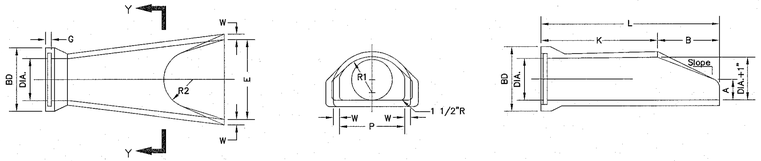

DIA.	W	A	B	C	D	E	BD	K	L	P	DIA. +1"	R1	R2	S	G	Slope
12"	2"	4"	2'–0"	4'–0 7/8"	6'–1 3/8"	2'–0"	20"	4'–8 1/8"	6'–6 1/8"	19 15/16"	13"	10 1/8"	9"	4"	2 1/2"	3:1
15"	2 1/4"	6"	2'–3"	3'–10"	6'–1 1/2"	2'–6"	24"	4'–3 11/16"	6'–8 11/16"	24 5/16"	16"	12 1/2"	11"	4"	2 1/2"	3:1
18"	2 1/2"	9"	2'–3"	3'–10"	6'–1"	3'–0"	28"	4'–3 7/8"	6'–6 7/8"	29"	19"	15 1/2"	12"	4"	2 3/4"	3:1
21"	2 3/4"	9"	2'–11"	3'–2"	6'–1"	3'–6"	32"	5'–8 5/16"	6'–7 5/16"	31 5/8"	22"	16 1/8"	13"	4"	2 3/4"	3:1
24"	3"	9 1/2"	3'–7 1/2"	2'–6"	6'–1"	4'–0"	36"	5'–0 1/2"	6'–8"	33 3/16"	25"	16 13/16"	14"	4"	3"	3:1

R.C.P. FLARED END SECTION DETAILS

NOT TO SCALE

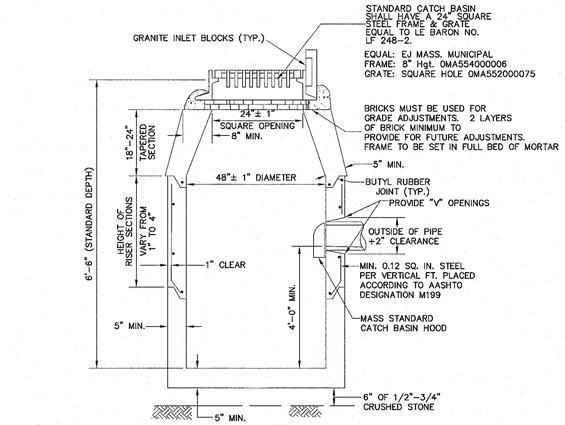

NOTE: NO BELL ENDS IN CATCH BASIN. CONNECTIONS TO BE TIGHTLY SEALED WITH MORTAR.

PRECAST CONCRETE CATCH BASIN DETAILS

NOT TO SCALE

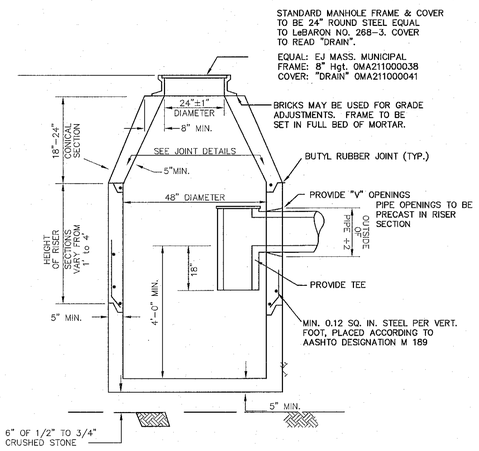

PRECAST 4' SUMP MANHOLE DETAIL

NOT TO SCALE

NOT USED

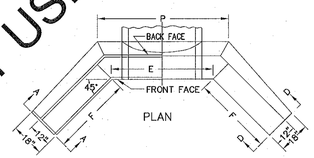

D	E	F	G	H	J	L	N	P
12"	2'–6"	4'–8"	3'–2"	4'–0"	2'–0"	1'–6"	1'–2"	3'–5"
15"	2'–9"	5'–4"	3'–3"	4'–3"	2'–3"	1'–6"	1'–3"	3'–9"
18"	3'–0"	6'–4"	3'–6"	4'–6"	2'–6"	1'–6"	1'–6"	4'–1"
21"	3'–3"	7'–0"	3'–8"	4'–9"	2'–9"	1'–6"	1'–8"	4'–4"
24"	3'–6"	7'–5"	3'–9"	5'–0"	3'–0"	1'–6"	1'–9"	4'–7"
30"	4'–0"	8'–4"	4'–0"	5'–6"	3'–6"	1'–6"	2'–0"	5'–3"
36"	4'–6"	9'–6"	4'–3"	6'–0"	4'–0"	1'–8"	2'–3"	5'–11"
42"	5'–0"	10'–7"	4'–6"	6'–6"	4'–6"	1'–10"	2'–6"	6'–6"
48"	5'–6"	11'–8"	4'–9"	7'–0"	5'–0"	2'–0"	2'–9"	7'–2"

1.) ALL CONCRETE DIMENSIONS SHOWN ARE MINIMUM
2.) CONCRETE SHALL BE 4000 P.S.I. MINIMUM
3.) ALL REINFORCING SHALL BE #4 MINIMUM

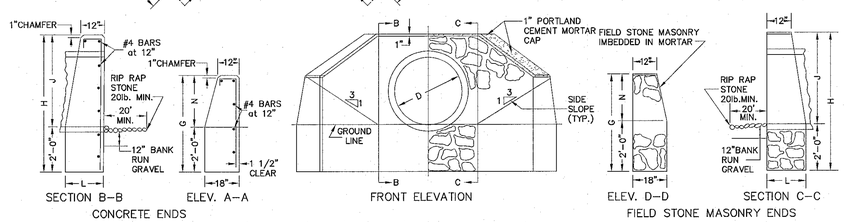

CONCRETE AND FIELD STONE MASONARY HEADWALL \ WINGWALL DETAILS

NOT TO SCALE

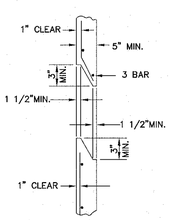

PRECAST STRUCTURE JOINT DETAILS

NOT TO SCALE

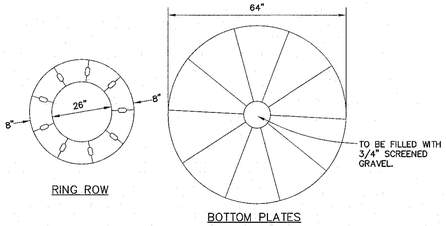

BLOCK CATCH BASIN & MANHOLE BOTTOM DETAILS

NOT TO SCALE

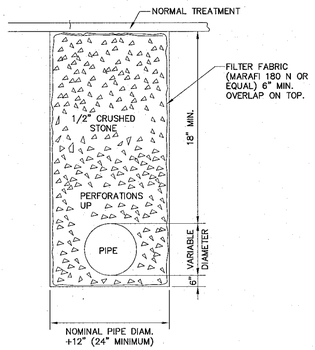

SUBDRAIN DETAILS

NOT TO SCALE

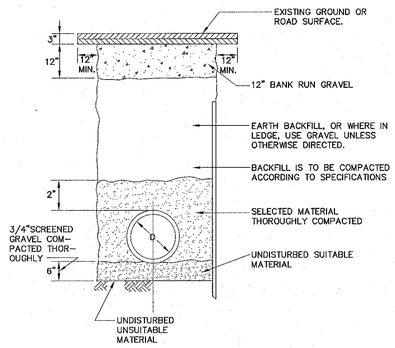

TYPICAL DRAIN TRENCH DETAILS

NOT TO SCALE

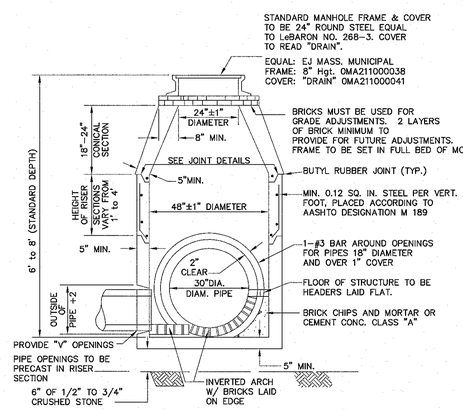

PRECAST CONCRETE MANHOLE DETAILS

NOT TO SCALE

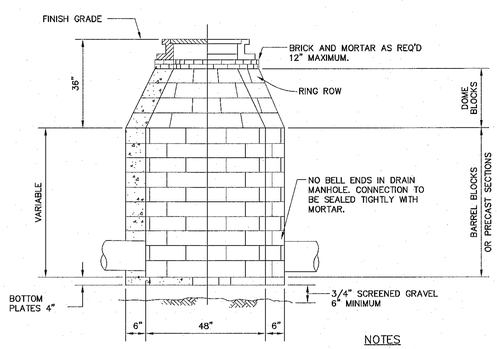

NOTES

1. ALL DRAIN MANHOLES TO HAVE BRICK INVERTS. SEE PRECAST MANHOLE DETAILS.
2. MANHOLE BLOCKS MORE THAN 9' IN DEPTH TO BE 8" BLOCK.

BLOCK DRAIN MANHOLE DETAILS

NOT TO SCALE

Note:

1) All details are subject to change without notice. Check with the Town of Walpole prior to using these details for the most up to date revisions.

TOWN OF WALPOLE, MASSACHUSETTS
DEPARTMENT OF PUBLIC WORKS
PLAN SHOWING TYPICAL DRAINAGE CONSTRUCTION DETAILS

REV. #	DATE	DESCRIPTION	BY
1	7-11-06	DRAWN TO AUTOCAD FILE	MAJ
2	11-22-03	MANY MISC. UPDATES	MAJ

REVISIONS

No.	DATE	DESCRIPTION
1	05/21/20	DRAINAGE SYSTEM
2	10/22/20	CONSERVATION COMMENTS
3	02/23/22	ZBA COMMENTS, REDUCE TO 38 UNITS
4	05/05/22	20 LOT RESIDENTIAL SUBDIVISION

AMENDED SITE DEVELOPMENT PLAN
A COMPREHENSIVE PERMIT M.G.L.c. 40B
"THE RESIDENCES AT BURNS AVENUE"
WALPOLE, MASSACHUSETTS

APPLICANT:
WALL STREET DEVELOPMENT CORP.
P.O. BOX 272
WESTWOOD, MA 02090

GLM Engineering Consultants, Inc.
19 EXCHANGE STREET
HOLLISTON, MA 01746
P: 508–429–1100
F: 508–429–7160
www.GLMengineering.com

DRW.: rst
JOB No. 15,588
DATE: APRIL 21, 2020
SCALE: 1"= 30'
SHEET: 10 of 13
PLAN #: 27,096

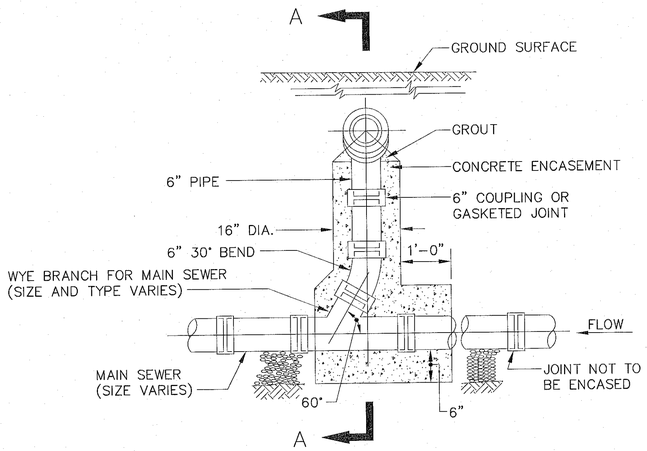

ELEVATION

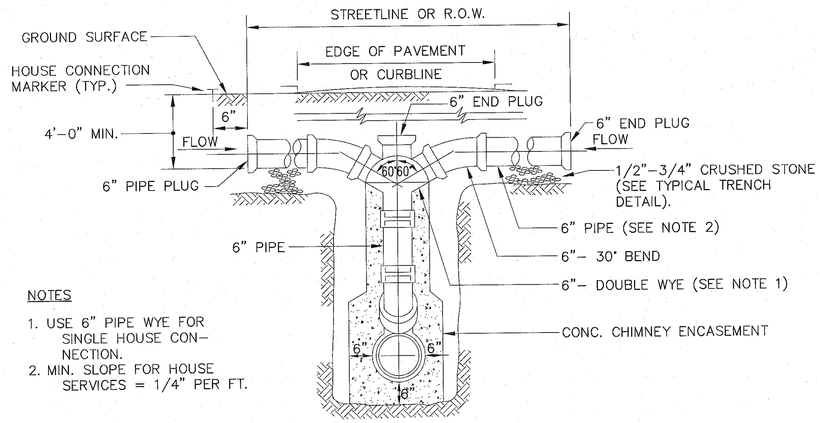

NOTES

1. USE 6" PIPE WYE FOR SINGLE HOUSE CONNECTION.
2. MIN. SLOPE FOR HOUSE SERVICES = 1/4" PER FT.

SECTION A-A

TYPICAL HOUSE SERVICE CONNECTION & CHIMNEY DETAIL

(FOR MAIN SEWER OVER 8'-0" DEEP)
NOT TO SCALE

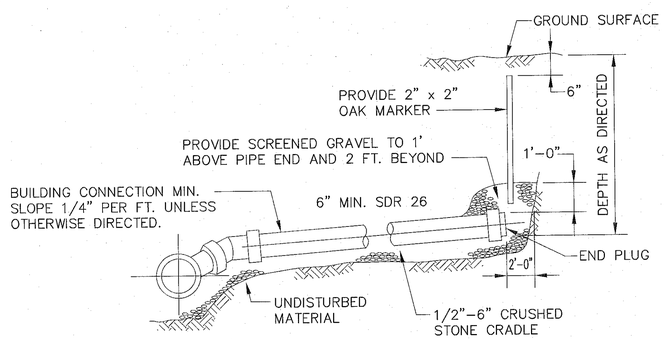

SECTION

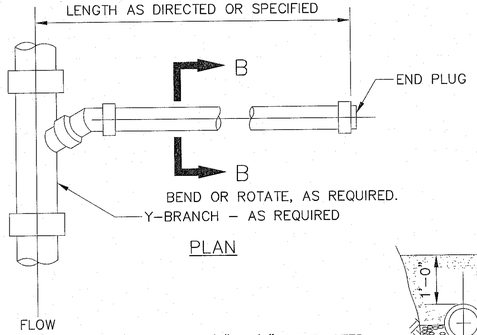

PLAN

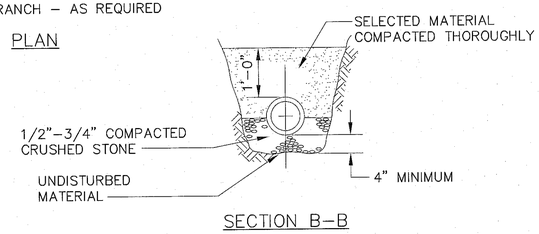

SECTION B-B

TYPICAL BUILDING CONNECTION

NOT TO SCALE

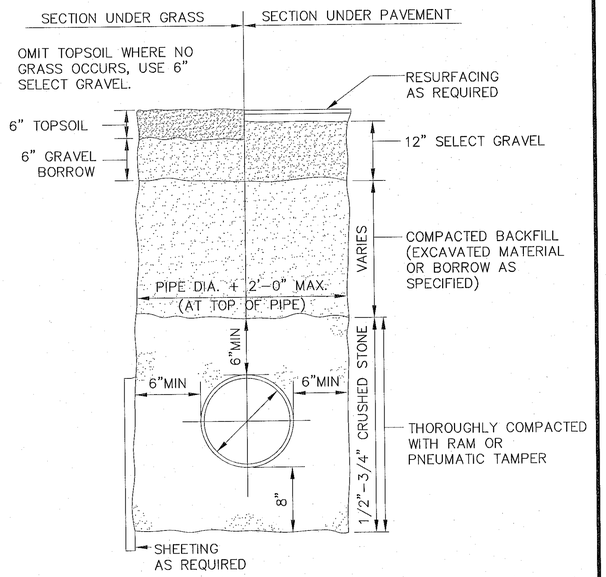

TYPICAL SEWER TRENCH DETAIL

NOT TO SCALE

Note:

1) All details are subject to change without notice. Check with the Town of Walpole prior to using these details for the most up to date revisions.

TOWN OF WALPOLE, MASSACHUSETTS
DEPARTMENT OF PUBLIC WORKS
PLAN SHOWING TYPICAL SEWAGE CONSTRUCTION DETAILS

REV. #	DATE	DESCRIPTION	BY
1	7-11-06	DRAWN TO AUTOCAD FILE	MAJ
2	11-22-02	MANY MISC. UPDATES	MAJ

REVISIONS

No.	DATE	DESCRIPTION
1	05/21/20	DRAINAGE SYSTEM
2	10/22/20	CONSERVATION COMMENTS
3	02/23/22	ZBA COMMENTS, REDUCE TO 38 UNITS
4	05/05/22	20 LOT RESIDENTIAL SUBDIVISION

AMENDED SITE DEVELOPMENT PLAN
A COMPREHENSIVE PERMIT M.G.L.c. 40B
"THE RESIDENCES AT BURNS AVENUE"
WALPOLE, MASSACHUSETTS

APPLICANT:
WALL STREET DEVELOPMENT CORP.
P.O. BOX 272
WESTWOOD, MA 02090

GLM Engineering Consultants, Inc.
19 EXCHANGE STREET
HOLLISTON, MA 01746
P: 508-429-1100
F: 508-429-7160
www.GLMengineering.com

DRW.:	rst
JOB No.	15,588
DATE:	APRIL 21, 2020
SCALE:	1"= 30'
SHEET:	11 of 13
PLAN #:	27,096

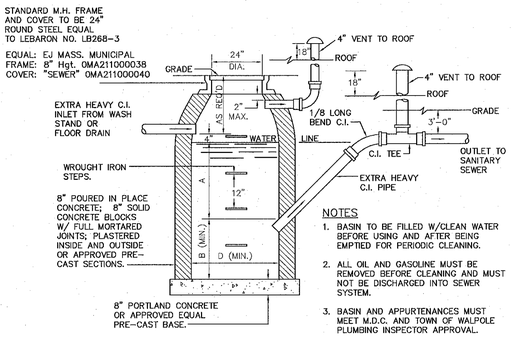

NOTES

1. BASIN TO BE FILLED W/CLEAN WATER BEFORE USING AND AFTER BEING EMPTIED FOR PERIODIC CLEANING.
2. ALL OIL AND GASOLINE MUST BE REMOVED BEFORE CLEANING AND MUST NOT BE DISCHARGED INTO SEWER SYSTEM.
3. BASIN AND APPURTENANCES MUST MEET M.D.C. AND TOWN OF WALPOLE PLUMBING INSPECTOR APPROVAL.

INLET	D	A	B
4"	4'-0" 3'-6"ø	2'-3" 3'-0"	1'-11" 2'-6"
5"	3'-6"ø 3'-6"x3'-6" 4'-0"ø 4'-0"x4'-0" 4'-6"ø	5'-0" 4'-0" 3'-6" 3'-0" 3'-0"	4'-0" 3'-0" 3'-0" 2'-6" 2'-6"
6"	4'-0"ø 4'-0"x4'-0" 4'-6"ø 4'-6"x4'-6" 5'-0"ø 5'-0"x5'-0"	5'-0" 4'-0" 4'-0" 3'-6" 3'-6" 3'-0"	4'-6" 3'-6" 3'-6" 3'-0" 3'-0" 2'-6"
8"	5'-0"ø 5'-6x5'-6" 6'-0"ø 6'-0"x6'-0" 6'-6"ø 6'-6"x6'-6"	6'-0" 4'-6" 4'-0" 3'-0" 3'-6" 3'-0"	5'-0" 4'-0" 3'-6" 2'-6" 3'-0" 2'-6"

NOTE:
FOR INLETS LARGER THAN 8", THE DESIGN AND DIMENSIONS WILL BE DETERMINED FOR EACH PARTICULAR CASE.

CIRCULAR BASINS ARE RECOMMENDED.

STANDARD M.D.C. CATCH BASIN & GASOLINE TRAP DETAILS

NOT TO SCALE

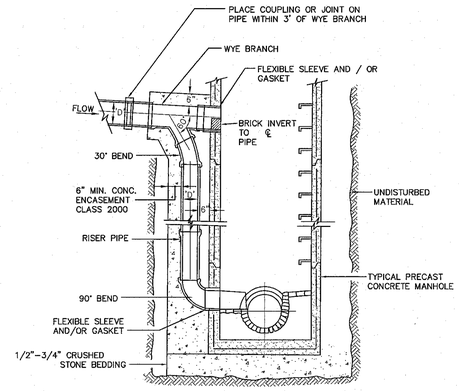

TYPICAL OUTSIDE DROP INLET MANHOLE DETAILS

NOT TO SCALE

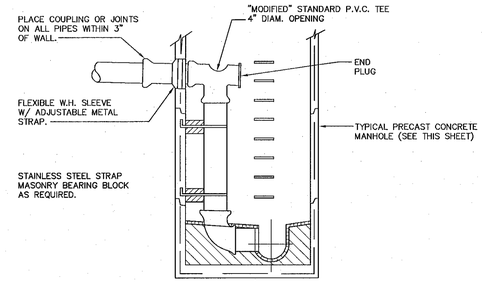

TYPICAL INSIDE DROP INLET MANHOLE DETAILS

NOT TO SCALE

*NOTE: SMH #'S 2-4 SHALL BE INSTALLED WITH BOLT DOWN COVERS.

STANDARD MANHOLE FRAME AND COVER TO BE 24" ROUND STEEL FRAME AND COVER EQUAL TO LEBARON NO. LB 268-3. COVER TO READ "SEWER"

EQUAL: EJ MASS. MUNICIPAL
FRAME: 8" Hgt. 0MA211000038
COVER: "SEWER" 0MA211000040

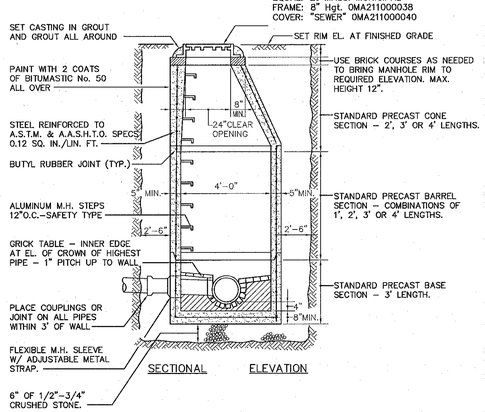

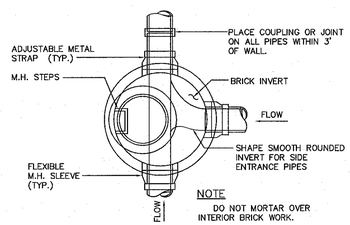

NOTE
DO NOT MORTAR OVER INTERIOR BRICK WORK.

TYPICAL PRECAST CONCRETE SEWER MANHOLE DETAILS

NOT TO SCALE

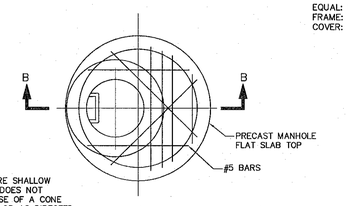

NOTE
FOR USE WHERE SHALLOW INSTALLATION DOES NOT PERMIT THE USE OF A CONE TYPE SECTION OR AS DIRECTED.

PLAN

*NOTE: SMH #'S 2-4 SHALL BE INSTALLED WITH BOLT DOWN COVERS.

STANDARD MANHOLE FRAME AND COVER TO BE 24" ROUND STEEL FRAME AND COVER EQUAL TO LEBARON NO. LB 268-3. COVER TO READ "SEWER"

EQUAL: EJ MASS. MUNICIPAL
FRAME: 8" Hgt. 0MA211000038
COVER: "SEWER" 0MA211000040

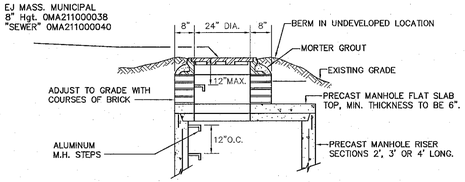

SECTION B-B

FLAT TOP SECTION

NOT TO SCALE

Note:

1) All details are subject to change without notice. Check with the Town of Walpole prior to using these details for the most up to date revisions.

TOWN OF WALPOLE, MASSACHUSETTS
DEPARTMENT OF PUBLIC WORKS
PLAN SHOWING TYPICAL SEWERAGE CONSTRUCTION DETAILS

REV. #	DATE	DESCRIPTION	BY
1	7-11-06	DRAWN TO AUTOCAD FILE	MAJ
2	11-20-08	UPDATES	MAJ

REVISIONS

No.	DATE	DESCRIPTION
1	05/21/20	DRAINAGE SYSTEM
2	10/22/20	CONSERVATION COMMENTS
3	02/23/22	ZBA COMMENTS, REDUCE TO 38 UNITS
4	05/05/22	20 LOT RESIDENTIAL SUBDIVISION

AMENDED SITE DEVELOPMENT PLAN
A COMPREHENSIVE PERMIT M.G.L.c. 40B
"THE RESIDENCES AT BURNS AVENUE"
WALPOLE, MASSACHUSETTS

APPLICANT:
WALL STREET DEVELOPMENT CORP.
P.O. BOX 272
WESTWOOD, MA 02090

GLM Engineering Consultants, Inc.
19 EXCHANGE STREET
HOLLISTON, MA 01746
P: 508-429-1100
F: 508-429-7160
www.GLMengineering.com

DRW.:	rst
JOB No.	15,588
DATE:	APRIL 21, 2020
SCALE:	1"= 30'
SHEET:	12 of 13
PLAN #:	27,096

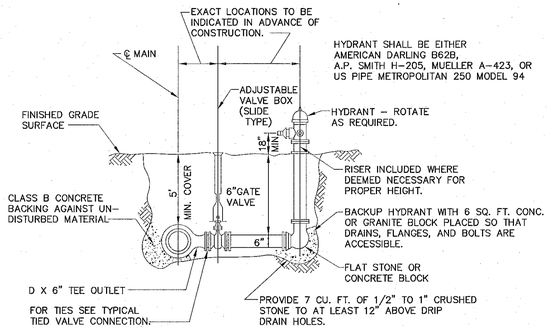

TYPICAL HYDRANT ASSEMBLY DETAIL

NOT TO SCALE

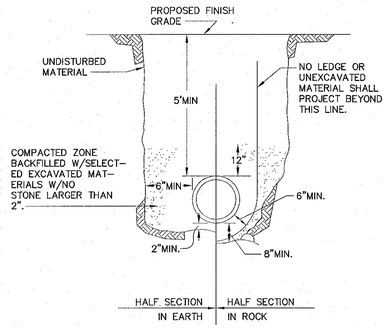

WATER MAIN TRENCH DETAIL

NOT TO SCALE

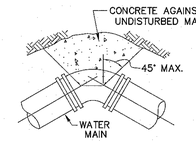

TYPICAL BEND

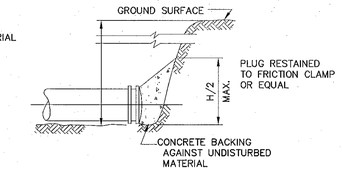

TYPICAL PLUG

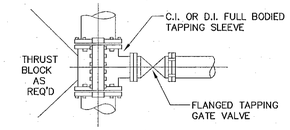

TAPPING SLEEVE AND VALVE DETAILS

NOT TO SCALE

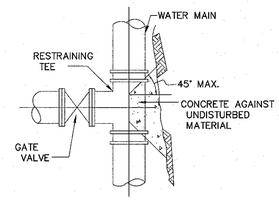

TYPICAL TEE

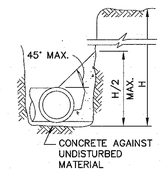

TYPICAL SECTION

NOTE: CONCRETE FOR THRUST BLOCKS SHALL BE NO LONGER THAN THE RATIO OF 2 1/2 : 5 1/2 AND SHALL HAVE A MINIMUM COMPRESSION STRENGTH OF 2000 PSI (SO THAT FLANGES AND BOLTS ARE ACCESSIBLE.)

BEARING AREAS OF THRUST BLOCKS (BEARING AREA IN SQUARE FT.)

PIPE SIZE INCHES	1/4 BEND	1/8 BEND	1/16 BEND OR LESS	PLUG TEES
6 AND 8	8	8		8
10 AND 12	22	13	8	16

TYPICAL THRUST BLOCK DETAIL

NOT TO SCALE

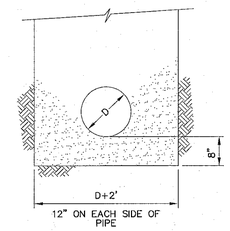

PAYMENT LIMIT FOR LEDGE EXCAVATION

NOT TO SCALE

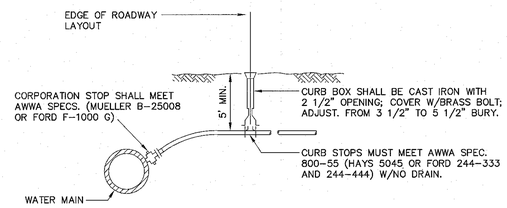

NOTE

1" TYPE K SERVICES
COPPER TUBING SHALL MEET AWWA SPEC. 76-CR TYPE K OR FEDERAL SPEC. WWT-799 TYPE K.

TYPICAL SERVICE CONNECTION

NOT TO SCALE

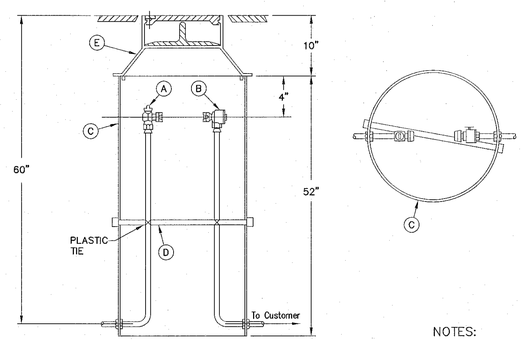

ITEM	DESCRIPTION	CAT No.
A	ANGLE BALL VALVE	BA13-232W
B	DUAL ANGLE CHECK VALVE	HHA31-3230
C	20" I.D. PVC PIPE	
D	1/2" PVC SUPPORT & CAPS	
E	METER BOX COVER & LID	W-3

* ORDERED SEPARATELY

NOTES:

1. ALL SERVICE SHALL ENTER THE PIT AT A 90° ANGLE TO THE STREET.
2. TO BE USED FOR DWELLINGS WHICH EXCEED A DISTANCE OF 200' FROM FRONT PROPERTY LINES.

METER PIT SPECIFICATIONS

NOT TO SCALE

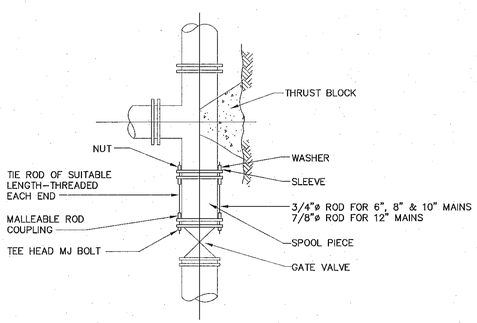

TYPICAL TIED MECHANICAL JOINT VALVE CONNECTION DETAILS

NOT TO SCALE

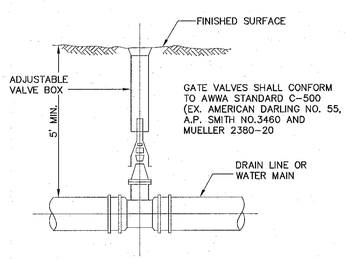

TYPICAL GATE VALVE

NOT TO SCALE

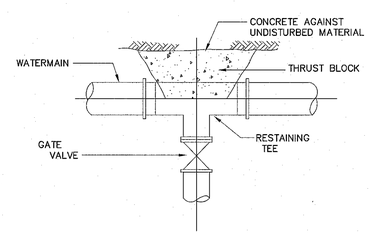

TYPICAL LATERAL GATE VALVE CONNECTION DETAILS

NOT TO SCALE

Note:

1) All details are subject to change without notice. Check with the Town of Walpole prior to using these details for the most up to date revisions.

TOWN OF WALPOLE, MASSACHUSETTS
DEPARTMENT OF PUBLIC WORKS
PLAN SHOWING TYPICAL
WATER MAIN CONSTRUCTION DETAILS

REV. #	DATE	DESCRIPTION	BY
1	7-11-08	DRAWN TO AUTOCAD FILE	MAJ
2	11-20-08	UPDATES	MAJ

REVISIONS

No.	DATE	DESCRIPTION
1	05/21/20	DRAINAGE SYSTEM
2	10/22/20	CONSERVATION COMMENTS
3	02/23/22	ZBA COMMENTS, REDUCE TO 38 UNITS
4	05/05/22	20 LOT RESIDENTIAL SUBDIVISION

AMENDED SITE DEVELOPMENT PLAN
A COMPREHENSIVE PERMIT M.G.L.c. 40B
"THE RESIDENCES AT BURNS AVENUE"
WALPOLE, MASSACHUSETTS

APPLICANT:
WALL STREET DEVELOPMENT CORP.
P.O. BOX 272
WESTWOOD, MA 02090

GLM Engineering Consultants, Inc.
19 EXCHANGE STREET
HOLLISTON, MA 01746
P:508-429-1100
F:508-429-7160
www.GLMengineering.com

DRW.: rst
JOB No. 15,588
DATE: APRIL 21, 2020
SCALE: 1"= 30'
SHEET: 13 of 13
PLAN #: 27,096

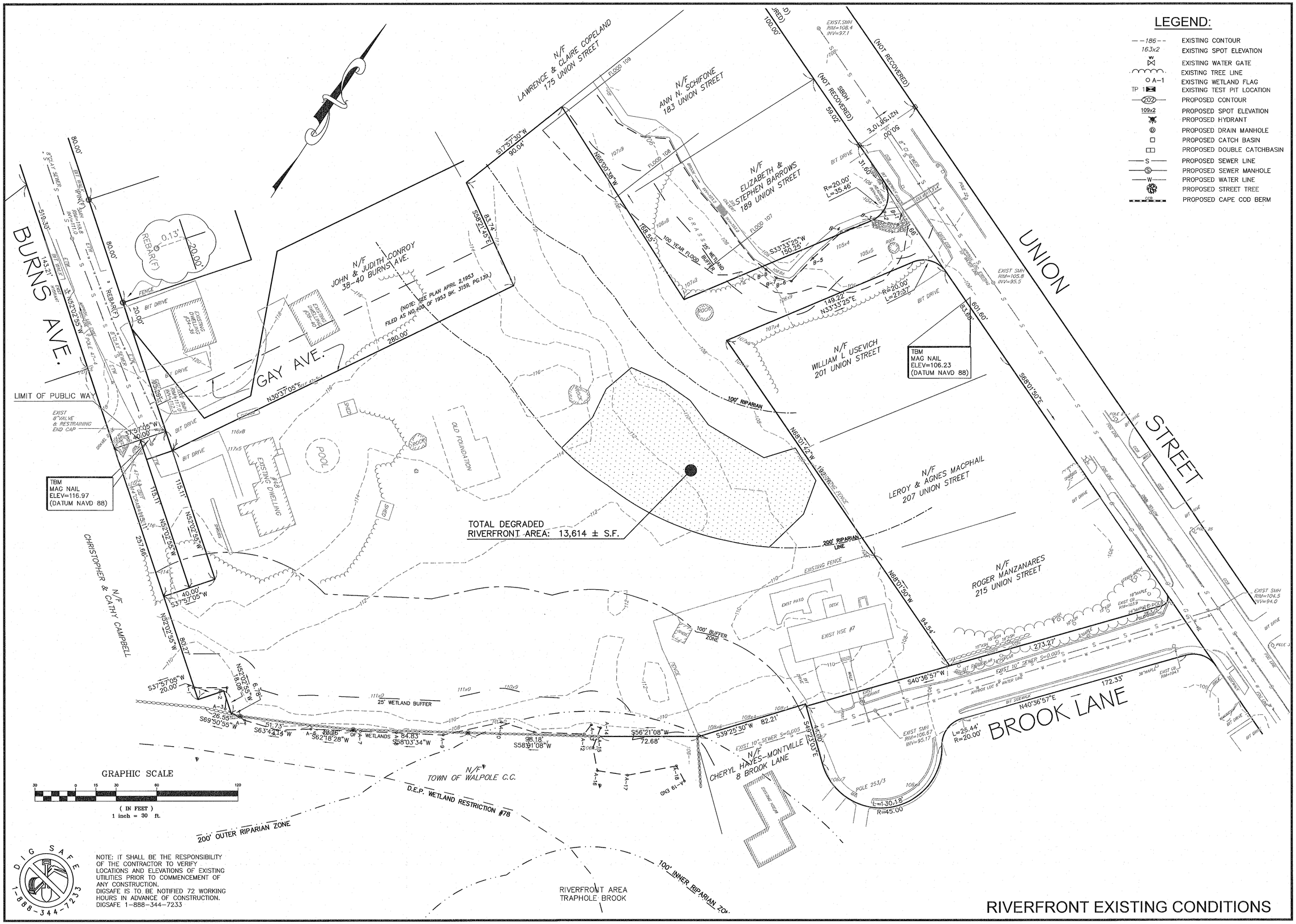

RIVERFRONT EXISTING CONDITIONS

REVISIONS

No.	DATE	DESCRIPTION
1	05/21/20	DRAINAGE SYSTEM
2	10/22/20	CONSERVATION COMMENTS
3	02/23/22	ZBA COMMENTS, REDUCE TO 38 UNITS
4	05/05/22	20 LOT RESIDENTIAL SUBDIVISION

COMMONWEALTH OF MASSACHUSETTS JOYCE E. HASTINGS No. 39393 REGISTERED PROFESSIONAL LAND SURVEYOR 5/5/2022

COMMONWEALTH OF MASSACHUSETTS ROBERT S. TRUAX CIVIL NO. 58567 REGISTERED PROFESSIONAL ENGINEER 5/5/22

AMENDED SITE DEVELOPMENT PLAN
A COMPREHENSIVE PERMIT M.G.L.c. 40B
"THE RESIDENCES AT BURNS AVENUE"
WALPOLE, MASSACHUSETTS

APPLICANT:
WALL STREET DEVELOPMENT CORP.
P.O. BOX 272
WESTWOOD, MA 02090

GLM Engineering Consultants, Inc.
19 EXCHANGE STREET
HOLLISTON, MA 01746
P: 508-429-1100
F: 508-429-7160
www.GLMengineering.com

DRW.:	RST
JOB No.	15,588
DATE:	APRIL 21, 2020
SCALE:	1"= 30'
SHEET:	SUP-A
PLAN #:	27,096

TABLE OF PROJECT RIVERFRONT AREAS

TOTAL RIVERFRONT AREA WITHIN THE PROJECT SITE:	50,713 ± S.F.
TOTAL DEGRADED RIVERFRONT AREA:	13,614 ± S.F.

REDEVELOPMENT OF DEGRADED AREA 13,614 ± S.F.

ALTERATION AREA NOT DEGRADED 4,997 ± S.F.

RIVERFRONT AREA DISTURBANCE

REVISIONS

No.	DATE	DESCRIPTION
1	05/21/20	DRAINAGE SYSTEM
2	10/22/20	CONSERVATION COMMENTS
3	02/23/22	ZBA COMMENTS, REDUCE TO 38 UNITS
4	05/05/22	20 LOT RESIDENTIAL SUBDIVISION

COMMONWEALTH OF MASSACHUSETTS JOYCE E. HASTINGS No. 39393 REGISTERED PROFESSIONAL LAND SURVEYOR 5/5/2022

COMMONWEALTH OF MASSACHUSETTS ROBERT S. TRUAX CIVIL NO. 56567 REGISTERED PROFESSIONAL ENGINEER 5/5/22

AMENDED SITE DEVELOPMENT PLAN
A COMPREHENSIVE PERMIT M.G.L.c. 40B
"THE RESIDENCES AT BURNS AVENUE"
WALPOLE, MASSACHUSETTS

APPLICANT:
WALL STREET DEVELOPMENT CORP.
P.O. BOX 272
WESTWOOD, MA 02090

GLM Engineering Consultants, Inc.
19 EXCHANGE STREET
HOLLISTON, MA 01746
P: 508-429-1100
F: 508-429-7160
www.GLMengineering.com

DRW.: rst	
JOB No.	15,588
DATE:	APRIL 21, 2020
SCALE:	1"= 30'
SHEET:	SUP-B
PLAN #:	27,096

Proposed 25' Buffer Zone Restoration Area Protocol
(9,200 ± sf)

1. All metal and other solid waste debris will be removed from the area and properly disposed off–site;
2. The area will be graded to a stable slope;
3. The area will be covered with a minimum of 6 inches of high quality topsoil;
4. The area will be planted with native shrubs, minimum 1 gallon, container grown, as shown. Plant species will be from the following list (or other species as approved by WCC Staff prior to installation):
   - Highbush Blueberry Vaccinum corymbosum
   - Witch Hazel Hamamelis virginiana
   - Hazelnut Corylus americana
   - Maple–leaved viburnum Viburnum acerifolium
   - Flowering dogwood Cornus floridana
   - Serviceberry Amelanchier canadensis
5. The area will be planted with New England wetland plants conservation/wildlife mix at 1750 sf/lb or approved substitute; and
6. The area will be watered as necessary during the first six weeks after planting.

Riverfront Restoration Area (RFA) Protocol

1. Remove and replace surficial degraded soils while retaining the extant trees to the degree feasible.
2. Upon removal of surficial soils, clean topsoil will be placed and spread with maximal care to minimize root damage and compression. A small rubber track vehicle will be used, with hand raking to finish the soil addition.
3. Desperse the area with approximately six (6) inches of clean, native leaf litter, either freshly gathered or maderately composted, to mimic the forest floor cover among the extant trees.

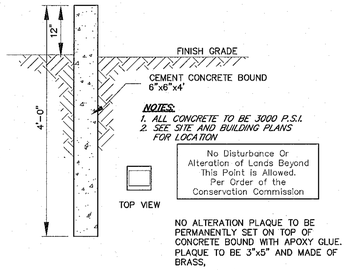

CONCRETE WETLAND BOUND

(NO SCALE)

CONSTRUCTION SEQUENCE (RIVERFRONT AREA)

1. Stake limit of work, install erosion control barriers.
2. Cut trees, clear and grub
3. Install sewer line
   - Trench excavation, stockpile material adjacent trench. Use trench box to stabilize trench.
   - Backfill trench
4. Waterline installation
   - Trench excavation, stockpile material adjacent to trench away from river.
   - Backfill trench

GRAPHIC SCALE

30 0 15 30 60 120

(IN FEET)
1 inch = 30 ft.

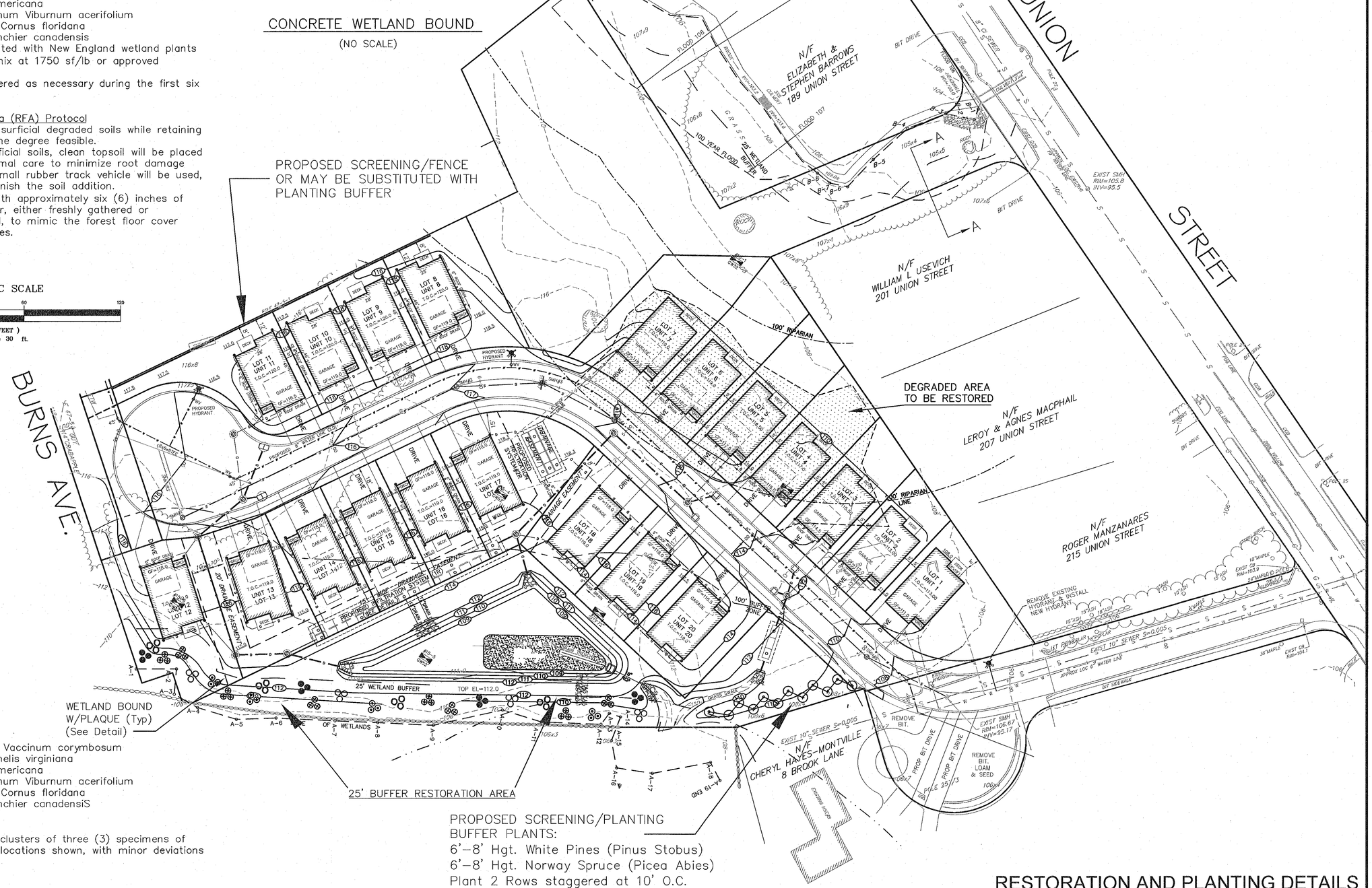

PLANTING LEGEND

- O – Highbush Blueberry Vaccinum corymbosum
- ⊕ – Witch Hazel Hamamelis virginiana
- ⊙ – Hazelnut Corylus americana
- ● – Maple–leaved viburnum Viburnum acerifolium
- ⊕ – Flowering dogwood Cornus floridana
- O – Serviceberry Amelanchier canadensiS

Note:
Shrubs will be planted in clusters of three (3) specimens of the same species at the locations shown, with minor deviations due to site conditions.

RESTORATION AND PLANTING DETAILS

REVISIONS

No.	DATE	DESCRIPTION
1	05/21/20	DRAINAGE SYSTEM
2	10/22/20	CONSERVATION COMMENTS
3	02/23/22	ZBA COMMENTS, REDUCE TO 38 UNITS
4	05/05/22	20 LOT RESIDENTIAL SUBDIVISION

COMMONWEALTH OF MASSACHUSETTS JOYCE E. HASTINGS No. 39393 REGISTERED PROFESSIONAL LAND SURVEYOR 5/5/2022

COMMONWEALTH OF MASSACHUSETTS ROBERT S. TRIUX CIVIL NO. 56567 REGISTERED PROFESSIONAL ENGINEER 5/5/22

AMENDED SITE DEVELOPMENT PLAN
A COMPREHENSIVE PERMIT M.G.L.c. 40B
"THE RESIDENCES AT BURNS AVENUE"
WALPOLE, MASSACHUSETTS

APPLICANT:
WALL STREET DEVELOPMENT CORP.
P.O. BOX 272
WESTWOOD, MA 02090

GLM Engineering Consultants, Inc.
19 EXCHANGE STREET
HOLLISTON, MA 01746
P: 508–429–1100
F: 508–429–7160
www.GLMengineering.com

DRW.:	rst
JOB No.	15,588
DATE:	APRIL 21, 2020
SCALE:	1"= 30'
SHEET:	SUP-C
PLAN #:	27,096